GUILD ◆ EDITION

Woodsmith®

Woodsmith.com

Vol. 43 / No. 255

GAME NIGHT UPGRADE:
CHESS SET

Also:

- **All About**
  Matt Cremona Chair Kits
- **In the Shop**
  Drill Press Primer
- **Heirloom Project**
  Shaker Sewing Cabinet

Woodpeckers®

Precision Woodworking Squares

- One-piece central core machined to exacting tolerance.
- Stainless model includes scribing guides for perfect parallel layout.
- Lip formed by base keeps the square flat on your work.
- Scales engraved to a tolerance of ±.004" total stack-up error.
- Guaranteed accurate to ±.0085° for life.
- Available in inch or metric graduations.

Precision Woodworking Square
Includes a Woodpeckers wall-mountable wooden case
12" 1281....$119.99
12" 1282SS Stainless Steel....$139.99
Other Sizes Available on Woodpeck.com

Precision T-Squares

- Precisely spaced 1mm holes machined every 1/16".
- Laser engraved scale accurate to ±.004".
- Outer edges machined to a 30° bevel for easy reading.
- 600mm metric version available.

Precision T-Square
Includes a wall-mountable Rack-It™
TS-12 12"....$89.99
TS-24 24"....$124.99
TS-32 32"....$154.99

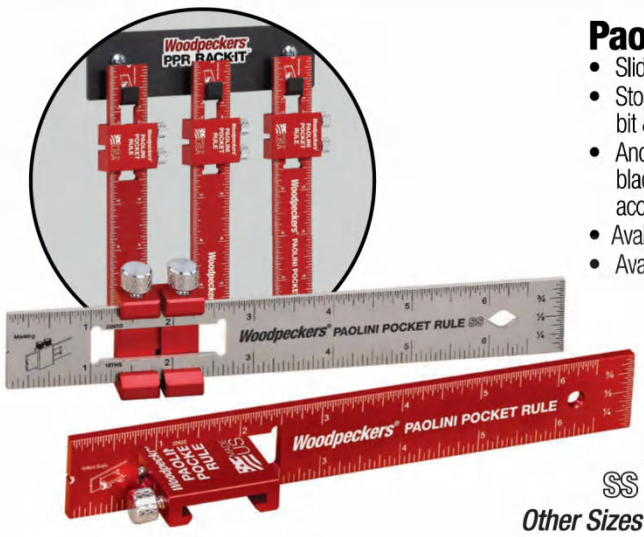

Paolini Pocket Rules

- Sliding stop simplifies repetitive marking.
- Stop doubles as stand to set router bit & saw blade height.
- Anodized aluminum or stainless steel blade with laser engraved scale accurate to ±.004".
- Available individually or as a set.
- Available in inch, metric or combination.

Paolini Pocket Rule
Includes a wall-mountable Rack-It™
6", 8", 12" Set....$124.99
SS 6", 8", 12" Set....$149.99
Other Sizes Available on Woodpeck.com

Saddle T-Squares

- Scribing holes on 1/32" centers.
- Milled from solid aluminum billet.
- Mark face and edge at the same time.
- Edges beveled 30° to reduce parallax.
- Scale accurate to ±.004".
- Available individually or as a set.
- Available in inch or metric graduations.
- Metric scribing guides on 1mm centers.

Includes a wall-mountable Rack-It™
Saddle T-Square Set....$299.99
Includes a Systainer case
Saddle T-Square Set....$369.99
Other Sizes Available on Woodpeck.com

in-DEXABLE™

Combination & Double Squares

- Push-button index locks head at any full-inch.
- Laser-cut scribing guides for precision parallel lines.
- Retractable support keeps head aligned to your stock.
- Combination & Double Squares in two sizes.

***in-DEXABLE* Squares**
Includes a wall-mountable Rack-It™
Double 6"....$129.99
Double XL 12"....$169.99
Combination 12"....$169.99
Combination XL 18"....$199.99

EZ Edge Corner Plane

- Plane sole is a perfect 90° to fit your stock.
- 3 radius profiles and 45° chamfer available.
- Hardened blades are easy to re-hone.
- Profile perfectly centered on your stock.

EZ Edge Corner Plane
Includes a wall-mountable Rack-It™
1/8", 3/16", 1/4" Radius
-or- 45° Chamfer....$159.99
Deluxe Set....$519.99

DP·PRO Drill Press Table System

NEW TOOL

- DP·PRO Fence integrates dust collection & delivers accuracy.
- Micro-adjustable DP·PRO Flip Stops.
- DP·PRO Drawer Base simplifies installation on any drill press.
- DP·PRO Tables are full 1" thick with laminate top & bottom.
- Extension Wings for long material support.
- Drawer Base and Fence compatible with all drill press tables.

DP·PRO Drill Press Table Master System
36" Table, 24" Fence.....$369.99
36" Table, 36" Fence.....$389.99
48" Table, 36" Fence.....$419.99
48" Table, 48" Fence.....$439.99

Drill Press & Hose not included.

Woodpeck.com

MADE IN USA

AUTO-LINE DRILL GUIDE™

- Drill perfectly perpendicular holes anywhere.
- Fence fits on all 4 sides and works 4 different ways.
- Laser-engraved target lines indicate center of bit.
- Works with nearly all 1/2" and smaller drills.
- 1" capacity inside frame and 2" capacity outboard.
- Optional extensions and stops available.

Drill not included.

Auto-Line Drill Guide....$239.99

Multi-Function Router Base

- Micrometer adjustment positions cutter perfectly.
- Cut parallel to existing edge or pivot in a perfect arc.
- Wide, stable base improves routing accuracy.
- Works with most routers that have guide rod holes.

Router not included.

Multi-Function Router Base
Includes 1 Pair Extension Rods
w/ 5/16" Guide Rods....$239.99
w/ 3/8" Guide Rods....$239.99
w/ 10mm & 1/4" Guide Rods....$239.99

Multi-Router

- True 3-axis linear control over your workpiece.
- Template system guides stock for flawless joinery.
- Mortise & tenon, dovetails, box joints and more.
- Tables travel on close-tolerance linear ball bearings.
- Repeatable results improve productivity.
- Works with many 2-HP round-body routers.

Multi-Router...$2699.00

Shown with optional ProScale, Pneumatic Clamps & Machine Stand.

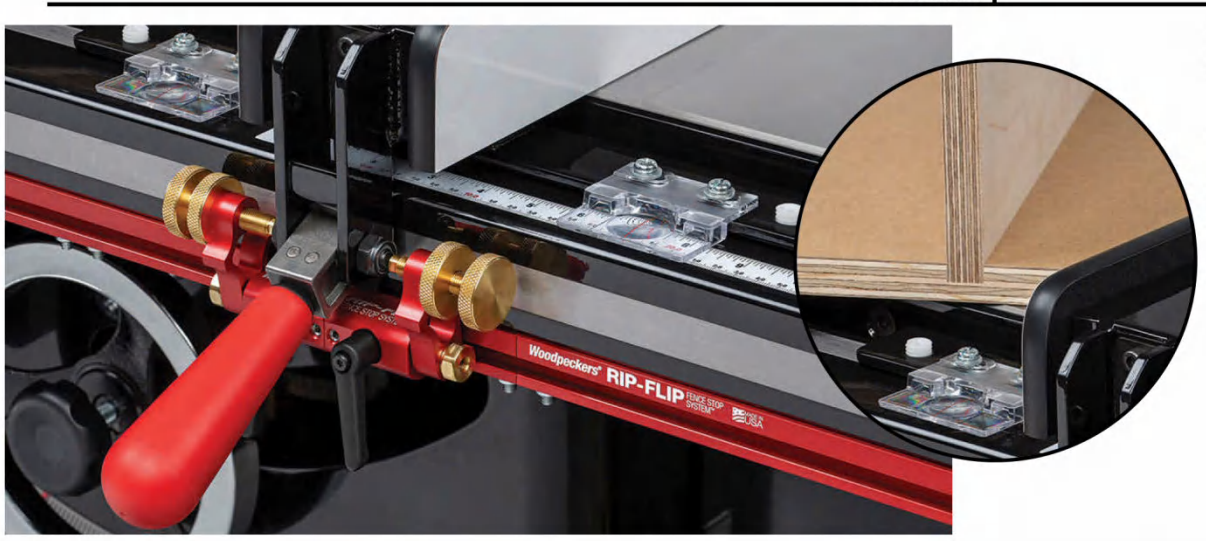

RIP-FLIP Fence Stop System™

- Bring your rip fence back to the same spot each and every time you need it.
- Stop drops out of the way when not needed, flips up when you want it.
- Couple two stops together for perfect fitting dadoes in two cuts.
- Models available for SawStop T-Glide Fences* and Powermatic Accu-Fences*.
- Extra stops and dado couplers available. Add as many as you need!

NEW TOOL

RIP-FLIP Fence Stop System
36" Capacity - *Fits SawStop....$209.99**
30" Capacity - *Fits Powermatic....$219.99**
52" Capacity - *Fits SawStop.....$219.99**
50" Capacity - *Fits Powermatic....$229.99**

DelVe Square SS®

- Offset base simplifies layout on standard 3/4" material.
- Perfect thirds for mortise and tenon layout.
- Perfect centers for dowel pins and loose tenons.
- Scribing Guides on eighth-inch centers.
- Machined steps in base create accurate set-up blocks.
- Angles in 1° increments plus 22-1/2°& 67-1/2°.

UNMATCHED ACCURACY LIFETIME Woodpeckers GUARANTEE EST. 1988

DelVe Square SS
Includes a wall-mountable Rack-It™
3-1/2"....$89.99
6"....$119.99
Inch Set....$189.99

Woodworkers Edge Rules

- Wraps around the corner of your stock for instant alignment.
- Mark face and edge at the same time.
- Optional stops simplify repetitive marking.
- Easy to use in the middle of a panel, as well.
- Sizes to fit every need…6-inch is perfect in your pocket.
- Available individually or as a set.
- Available in inch or metric graduations.

Woodworkers Edge Rule
Includes wall-mountable Rack-It™.
Edge Rule Kit & 4 Stops....$109.99
Other Sizes Available on Woodpeck.com

For more sizes & ordering options for these tools plus hundreds more, visit ***Woodpeck.com***

**NOTE: The Festool, DF-500, DF-700 XL, SawStop & Powermatic brand names are the registered trademarks of the respective companies and are not associated with Woodpeckers, LLC.*

Woodsmith®

AN ACTIVE INTEREST MEDIA PUBLICATION

EXECUTIVE EDITOR Phil Huber
SENIOR EDITOR Erich Lage
CONTRIBUTING WRITERS Bryan Nelson, Logan Wittmer
Danielle Rose Byrd

EXECUTIVE ART DIRECTOR Todd Lambirth
SENIOR ILLUSTRATOR Dirk Ver Steeg
SENIOR GRAPHIC DESIGNERS Bob Zimmerman, Becky Kralicek
CONTRIBUTING ILLUSTRATOR Erich Lage

CREATIVE DIRECTOR Chris Fitch
PROJECT DESIGNER Dillon Baker
PROJECT DESIGNER/BUILDER John Doyle
CAD SPECIALIST/BUILDER Steve Johnson
SHOP CRAFTSMAN Marc Hopkins
CONTRIBUTING PHOTOGRAPHERS Chris Hennessey, Jack Coyier
SENIOR ELECTRONIC IMAGE SPECIALIST Allan Ruhnke

HOME GROUP
ACTIVE INTEREST MEDIA

VP & GM, HOME GROUP Brian Van Heuverswyn
ADVERTISING SALES DIRECTOR Heather Glynn Gniazdowski
DIRECTOR OF PRODUCTION Phil Graham
CREATIVE DIRECTOR Edie Mann
CATAPULT CREATIVE LABS Amanda Phillips
FINANCE MANAGER Bart A. Hawley
CIRCULATION DIRECTOR Paige Nordmeyer
DIRECTOR OF RETAIL SALES Susan A. Rose
ADVERTISING DIRECTOR Jack Christiansen
847-724-5633
jchristiansen@aimmedia.com
AD PRODUCTION COORDINATOR Kim Hoff
GRAPHIC DESIGNER Julie Green

Woodsmith® (USPS 465-410) (ISSN 0164-4114) is published bimonthly by the Home Group of Active Interest Media Holdco, Inc. The known office of publication is located at 2143 Grand Ave, Des Moines, IA 50312. Periodicals Postage Paid at Des Moines, IA, and additional mailing offices. Postmaster: Send address changes to Woodsmith, Box 37274, Boone, IA 50037-0274.

Woodsmith® is a registered trademark of Active Interest Media Holdco, Inc.
Copyright© 2021 Active Interest Media Holdco, Inc. All rights reserved.
Subscriptions: $29/year, Single copy: $7.99
Canadian Subscriptions: Canada Post Agreement No. 40038201. Send change of address information to PO Box 881, Station Main, Markham, ON L3P 8M6.
Canada BN 82564 2911
Printed in U.S.A.

WoodsmithCustomerService.com

ONLINE SUBSCRIBER SERVICES

- **VIEW** your account information
- **PAY** your bill
- **RENEW** your subscription
- **CHANGE** your mailing or e-mail address

CUSTOMER SERVICE Phone: **800-333-5075** weekdays

SUBSCRIPTIONS
Customer Service
P.O. Box 842
Des Moines, IA 50304-9961
subscriptions@aimmedia.com

EDITORIAL
Woodsmith Magazine
2143 Grand Avenue
Des Moines, IA 50312
woodsmith@woodsmith.com

ACTIVE INTEREST MEDIA

PRESIDENT, HOME GROUP **Peter H. Miller**
PRESIDENT, MARINE GROUP **Gary De Sanctis**
VICE PRESIDENT, PEOPLE & PLACES **JoAnn Thomas**
CTO **Nelson Saenz**
SENIOR VICE PRESIDENT, OPERATIONS **Pat Fox**
VP DIGITAL PRODUCTS & PLATFORMS **Katie Herrell**
CHAIRMAN **Andrew W. Clurman**
CHAIRMAN EMERITUS **Efrem Zimbalist III**

from the editor

Sawdust

Some issues develop a theme. And it seems to happen all on its own. This issue had a couple projects get delayed and others moved up in the schedule. As a result, we now have an unofficial "Summer Storage Special Issue." The three projects — armoire, sewing table, and bathroom organizer cover a gamut of storage needs and styles.

In other news, Erich Lage has been promoted to Senior Editor. And Logan Wittmer is taking over as editor at Popular Woodworking. So we have an opening for an assistant editor. I'm looking for one of two kinds of people. First, a passionate woodworker who wants to learn more about the craft and share it with others — even if you don't have a lot of writing experience. Or second, a skillful writer who is curious about the craft of woodworking. If you're interested in joining our team in Des Moines, Iowa, I'd like to hear from you. You can find out more information at careers.aimmedia.com.

DANIELLE ROSE BYRD, CONTRIBUTING EDITOR

◄ Danielle Rose Byrd is a wood carver and sculptor who blends traditional and modern methods with ample experimentation and a wide range of tools to create pieces with varying degrees of function and heavy doses of texture.

Raised in the western foothills of Maine, she made many creatures, structures, and inventions using found items, sand, plants, sticks, trash, snow, and fabric. In college, she explored music and sound sculpture, and while building a handmade fiddle-ish instrument constructed from burn pile wood found on campus, and began carving scraps into spoons.

Find out more on her website, www.daniellerosebyrd.com, or on Instagram @danielle_rose_byrd.

PRIVACY STATEMENT: Active Interest Media HoldCo, Inc. is committed to protecting your privacy. For a full copy of our privacy statement, go to aimmedia.com/privacy-policy. COPYRIGHT: 2021 by Active Interest Media HoldCo, Inc., Boulder, Colorado. This publication may not be reproduced, either in whole or part, in any form without written permission from the publisher.

contents

No. 255 • June/July 2021

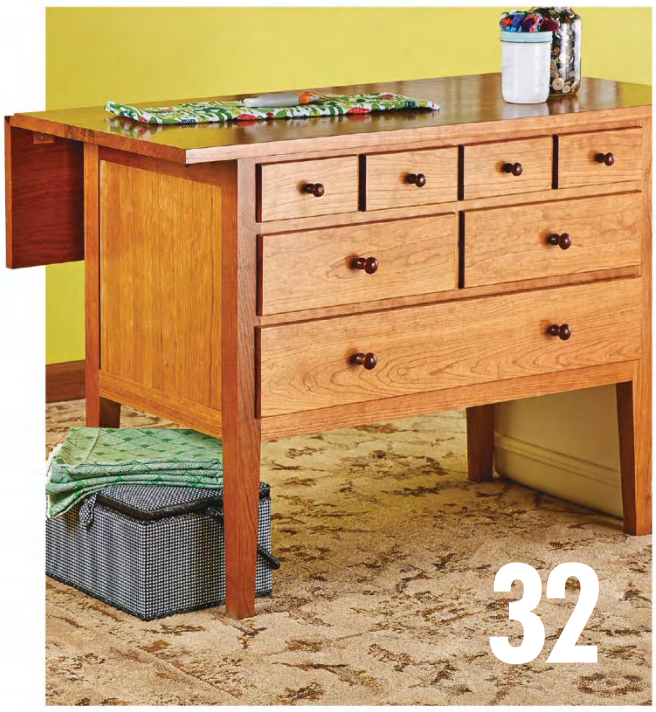

Projects

shop project
Crooked Knives 20
Channel your inner blacksmith to create a unique knife blade and handle for tackling curved cuts.

designer project
Mobile Bathroom Organizer 26
A couple hours in the shop are all it takes to add some valuable storage with this compact cart.

heirloom project
Sewing Table 32
Built for corraling sewing tools and supplies, this Shaker-inspired piece can serve other needs as well.

designer project
Youth Armoire 40
Clever design details combine to create a fun and versatile storage solution that grows with your child.

game project
Chess Set 46
Here's a new strategy for game night: Build your own matching chessboard and game pieces.

Departments

from our readers
Tips & Techniques 6

all about
Chair Kits 10

great gear
Joint Maker Pro 14

working with tools
Carving with Crooked Knives 54

woodworking essentials
Drill Press Primer 56

mastering the table saw
Dovetails Made Easy 60

Circle Routing Jig

One of my favorite uses for my router table is to cut circles. It may surprise people, but it's easily done with the jig you see here.

The jig is made of plywood and sized to fit your router table. A piece of aluminum has a series of holes sized to fit a pin. The pin becomes a pivot point for your workpiece. A pair of cleats on the ends of the base keep it from sliding side-to-side.

USING THE JIG. To use the jig, position it so the edge of the bit to the center of the pivot pin is the desired radius of your circle, then lock your router fence in place. This acts like a stop. Then, slide the base away from the bit and fit your workpiece over the pin. After turning your router on, you can push the base to the fence, engaging the bit in the workpiece. Then, simply spin your workpiece to create the circle.

Marc Hopkins
Des Moines, Iowa

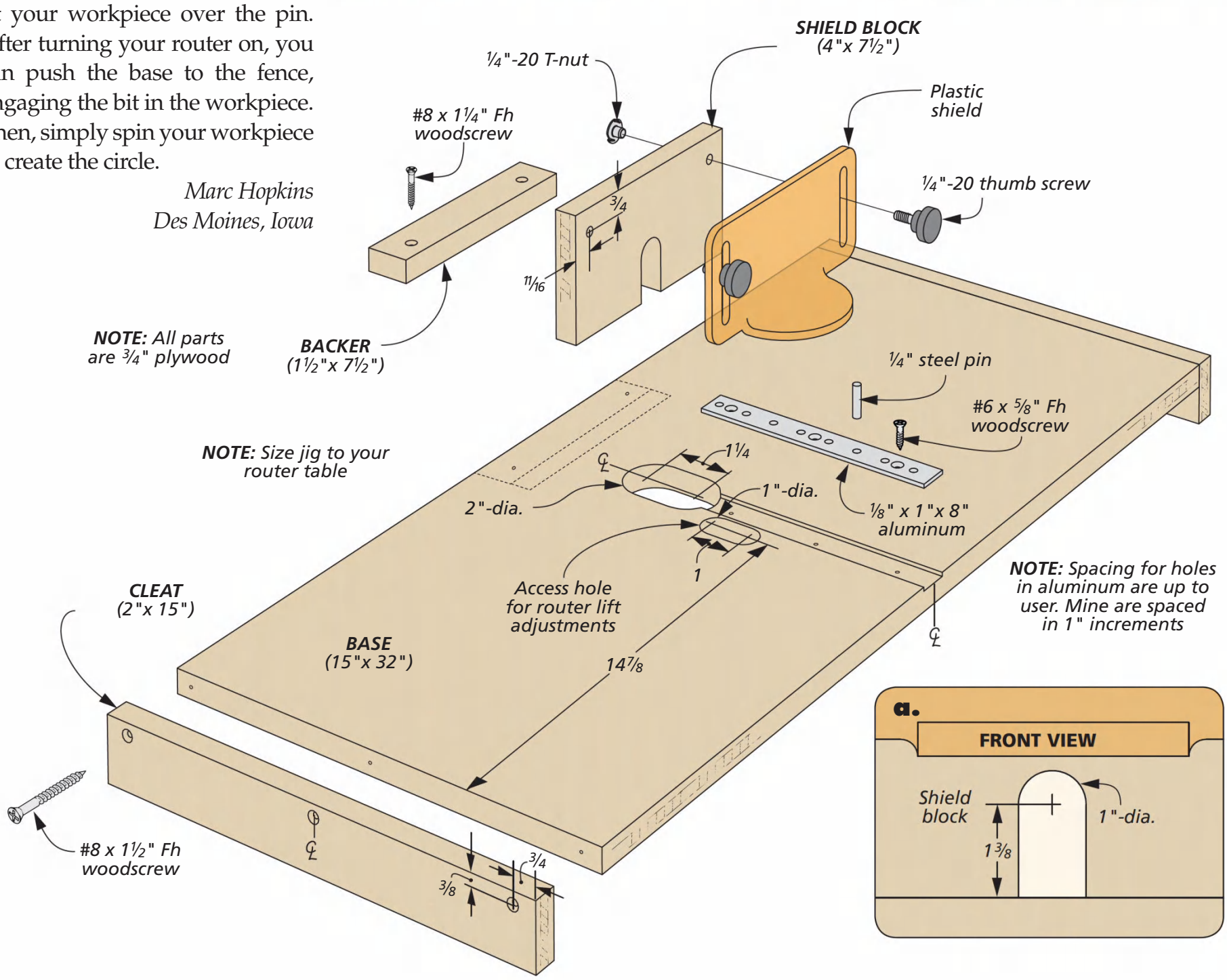

With over 25 years' experience in developing premium CNC bits,
Freud offers the most complete range of finite, yet durable CNC bits that deliver:

UP TO 2X LONGER CUTTING LIFE, UNMATCHED PERFORMANCE AND SUPERIOR QUALITY FINISHES.

Specially formulated with exclusive Freud-made TiCo™ Hi-Density carbide and unique cutting geometries, these solid carbide bits offer an unmatched cutting performance and durability on workshop and small CNC machines.

Featuring the industry's first functional coating, Black I.C.E. (Industrial Cooling Element) protects the solid carbide cutting edge by creating a slick, lubricant like action for less friction, heat and pitch buildup.

Whether you are creating detailed inlays, 3D decorative projects or sign making, Freud's unique, expanded offering of over 100 bits and sets delivers superior cutting performance and quality finish.

facebook.com/**freudtools** | **@FreudTools** | **FreudTools**.com/cnc | **@Freud_Tools** | youtube.com/**freudtools**

FREUD AMERICA, INC. | **1.800.334.4107** | ©2021 Freud America, Inc. All rights reserved. All specifications subject to change without prior notice.

QUICK TIPS

Micro Mesh Grits. *Greg Kopp* of *Norwalk, IA* kept losing the grit chart that came with his Micro Mesh sanding pads. Instead of relying on the chart to match the color to the grit, Greg has started to mark the grit with a fine-tipped marker on the edge of the sanding pads. Now, Greg can quickly see what grit the pad is.

Strop Cushion. *Bill White* of *Grand Portage, MN* often uses hold-downs in his work. However, using a hold down with softer woods can often leave dents in the workpiece. When chopping dovetails, Bill found that his leather strop was the perfect cushion to his holdfast. It keeps the workpeice from getting dented, and also keeps the strop close at hand. That way, while he works, Bill can quickly touch up his chisels while keeping his work protected.

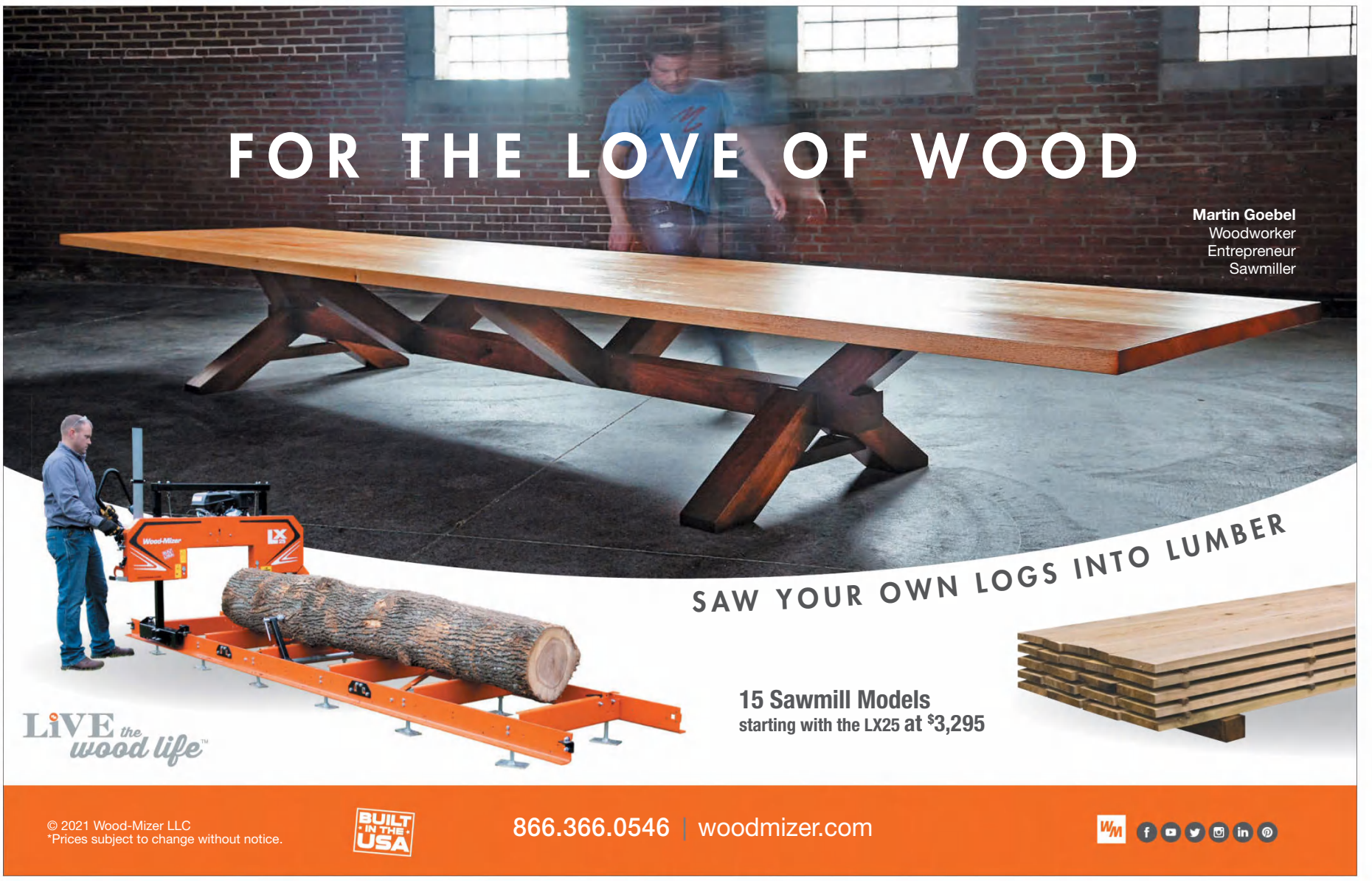

Mortising Machine Story Stick

Setting up a mortising machine to create mortises can sometimes be tricky. There's a handful of adjustments that you need to make, and if you have to recreate a setup, it can be difficult getting it back to where it was. My solution is to make a template that acts as a story stick.

TELL ME A STORY. As you can see in the photo at left, the story stick is a piece of thin plywood. I mark the part name and mortise location, length, and depth. Now, I can use the mortise to set not only the workpiece stops, but also the left and right stops for the machine (lower left photo). The final setting is to set the height the bit. This can quickly be done on the actual workpiece, as you see in the lower right photo, or easily referenced using the store stick set on edge.

Phil Huber
Urbandale, Iowa

◄ The story stick allows me to set the workpiece stops, along with the stops that control the movement of the router.

The final setting is ► to set the bit height which can quickly be done using the workpiece.

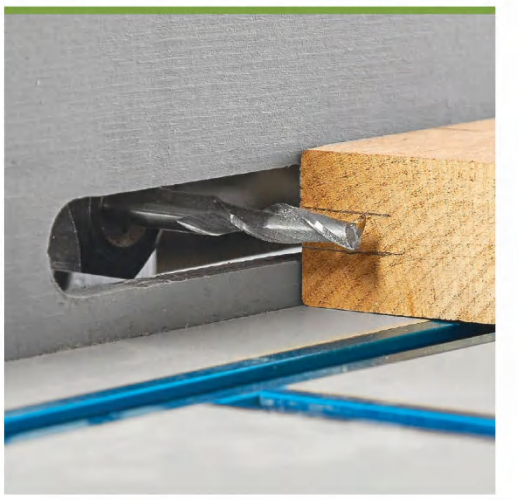

ENGRAVE | CUT | INLAY

- Laser engrave & cut wood at the touch of a button
- Customize woodworking projects for added value
- Laser systems ranging from 16" × 12" – 40" × 28"
- Wattage configurations up to 120
- USA made

EpilogLaser

888.437.4564 | sales@epiloglaser.com | www.epiloglaser.com/woodsmith

ALL About

Cremona Chair Kits

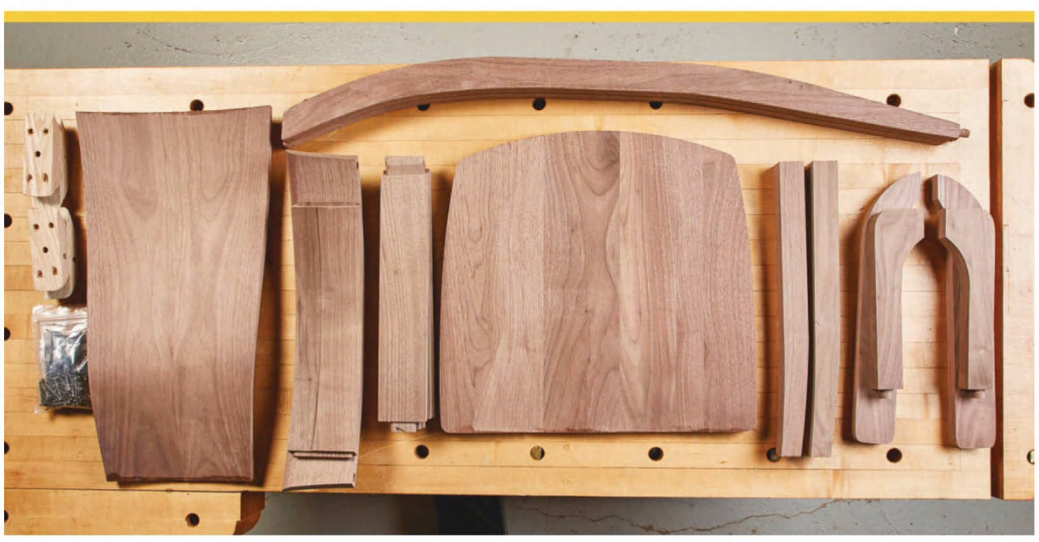

The chair kit comes with parts that are cut on a CNC router. The upper and lower rails, along with the back slat are steam bent, and the kit includes corner brackets and all the screws needed for assembly.

In talking with woodworkers, it seems like many build at least one dining table during some point in their woodworking journey. However, the number of woodworkers that build the matching chairs seems relatively small. And I can understand that. You just completed a large project. The last thing you want to do is start four, six, or eight other, slightly smaller, more complex projects.

MATT TO THE RESCUE. Luckily, woodworker and YouTuber Matt Cremona has introduced a line of chair kits that allows you to assemble and finish chairs with little effort. I had heard a lot of hype around Matt's kits, so I ordered a set of chairs to see what the fuss was about.

Written by: Logan Wittmer

As you can see in the lower left photo on the previous page, the kit comes with all of the parts CNC cut, including a steam bent crest rail, lower rail, and back slat. The kits are available in four different styles, with each one being offered in cherry, maple, and walnut. The kit shown here is the most formal of the offering, style 4, with the optional arm rests.

FIRST IMPRESSIONS. When the packages were delivered, I was impressed with how securely the bundles were wrapped. Expanding foam packs kept everything safe and dent-free from the ever-careful UPS.

As impressed as I was with the packing, I was just as happy with the quality of the stock used in the chairs. The walnut was clean and clear with great color. Plus, it had some great grain patterns.

SOME ASSEMBLY REQUIRED. Just because each of the chair kits comes pre-cut doesn't mean you can't get your woodworking fix with these chairs — there are a few details on each that need taken care of before you can assemble them. Most of the things to knock out before you assemble the chair are fit and finish items. The first, at least on this style, is to round or bevel the corners of the back slat so it will fit into the rail's mortises (upper right photo).

Fitting the back slat into the lower mortise required just a little bit of handwork. You could round over the corners of the slat with a rasp or router, but I found cutting a small bevel with a chisel did the trick.

A LITTLE FLARING. In all of the chair kits, you'll want to do a dry assembly. This will show where some of the joints need blending together. In the lower left photo, you can see the joint between the legs and the crest rail needs a little bit of rasp work to make it a smooth, fluid transition.

When you're working on the dry assembly, you'll also probably discover some areas where you'll want to add an edge treatment, or maybe even some embellishment (carving anyone?). One of those is the seat pan.

As you can see in the lower right photo, you'll want to round over the edges of the seat so it doesn't bite into the back of your legs as you sit in the chair. Because of the sculpted design of the seat, you'll need to stand the seat on edge and use a backer board to add extra support for the router base.

The most critical part of the handwork on kit style four is the transition from the leg to the crest rail. I blended it with a cabinetmaker's rasp, but a few minutes with a random orbital sander would work as well.

Rounding over the sculpted seat can be a trick, but a small palm router takes care of this lickity split. Leave the back edge square where it meets the lower rail.

Starting at 150-grit, the sanding goes quick on the chair kits. A few of the curved parts are best sanded by hand. If you're painting the kit, you can stop sanding at 180-grit.

Tape off the tenons before pre-finishing the parts. If you have spray equipment, you could probably get away with assembling the chair first and being deliberate while you spray the finish.

FINISH PREP. After fitting the parts, you can start on finish prep. These parts come pretty smooth, and you can start at about 150-grit. I sanded mine through 320-grit, because I planned on an oil finish. While most of the parts can be sanded with a random-orbit sander, some of the curved parts need to be hand sanded (left photo, above).

Pre-finishing parts is something that, as woodworkers, we know we should do. With a chair, I find that especially important. As you can see in the right photo above, I pre-finished all of the parts with oil. Taping off the tenons makes sure you'll have a good glue bond when you assemble the chair. If you're applying a top coat, and don't have a spray gun, I suggest doing your clear coat like this as well.

THREE-PART ASSEMBLY. Assembling the chairs is best done in stages. The front legs and stretcher can be glued togther as one unit, then the back legs with appropriate parts. With the curves on the back legs, a ratchet strap is probably the best bet to clamp them, and it worked well.

After the front and back leg assemblies are dry, you can assemble the rest of the chair. I would suggest installing the corner brackets while you can make adjustments to square. The final thing to wrap up is attaching the seat with screws.

After clamping up the chair, check the seat area for square. Make any necessary adjustments before attaching the corner brackets. The front brackets and rear brackets are at slightly different angles, so pay attention.

OVERALL IMPRESSION. After assembling these chair kits, I was suprised how much I liked them. The fit, finish, and quality of them leaves nothing to be desired. If you have a dining table project on the horizon, but you're dreading making chairs, I highly suggest you visit *Mattcremona.com* and take a look at the chair kits available. I don't think that you'll be disappointed. W

SHAPER

See it in action and book a demo

UPGRADE YOUR WORKSHOP

Precision Cutting Simplified

Shaper Origin is an easy-to-use handheld CNC router that brings digital precision to the craft of woodworking. With Shaper Origin + Workstation, you can create perfect box joints, mortise and tenon joinery, and more with ease and accuracy.

Visit shapertools.com

Joint Maker Pro

When *Bridge City Toolworks* released the original *Jointmaker Pro* a number of years ago, people were skeptical. But, as the reviews started rolling in, most people stated that it was one of the single most accurate ways to make cuts in wood. As a hand tool nut (this is technically a hand tool, right?), I knew that this was a tool that I needed to try out, and see if it really was worth the price of admission.

FAMILIAR FORM. As you can see in the photo above and on the next page, the *Jointmaker Pro v2* (*JMPv2*) will look familiar. If you slap a round blade in there, along with a motor, you'd have a table saw. The sliding table on the *JMPv2* looks very much like a cross cut sled that you would use on your table saw. In fact, the two aren't very different. Instead of a round blade and a motor, the *JMPv2* has a thin (.4mm) pull-saw style blade that's raised and lowered between strokes.

The *JMPv2* works by placing a workpiece on the table, and pushing it forward through the blade. The blade is slightly higher at the rear than the front. Between each stroke, you raise the blade slightly. With a little practice, you get the rhythm down pretty quickly — push, pull, and one crank. It can take between one and 30 motions to cut through a piece of stock; it

Written by: Logan Wittmer

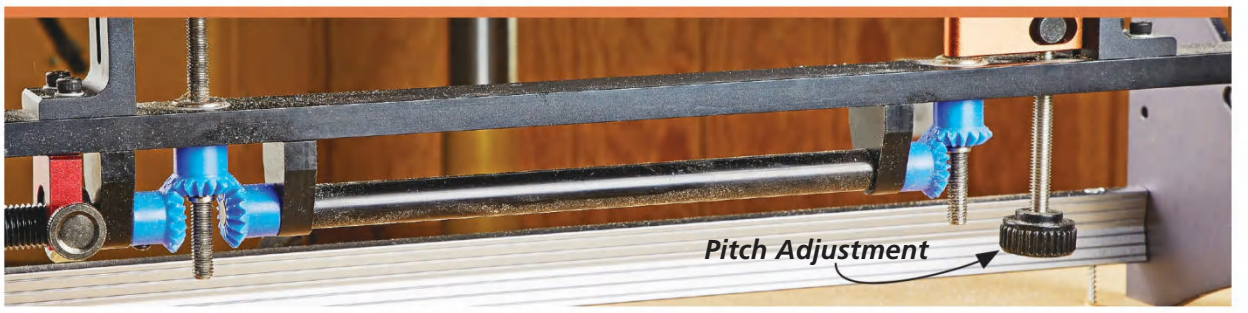

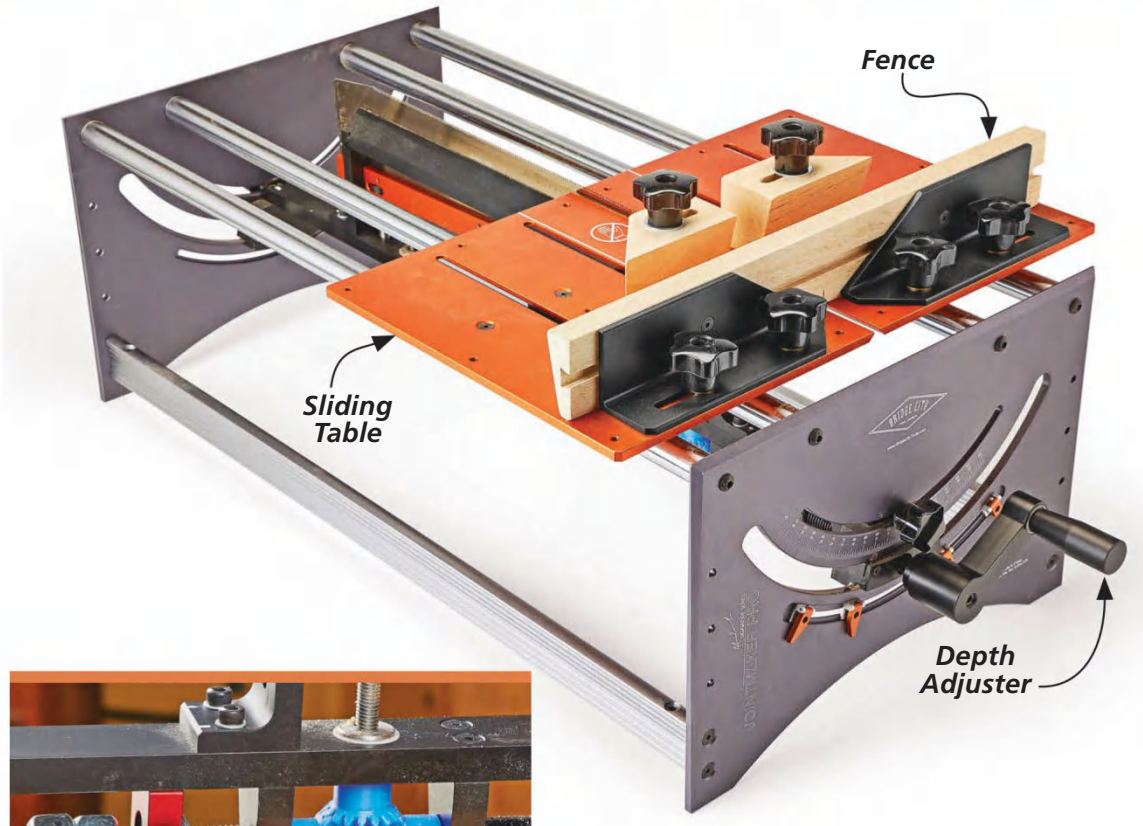

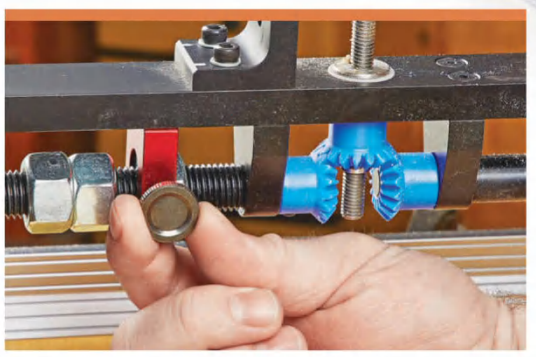

An included depth stop allows you to lock a pair of jam nuts on the underside of the *JMPv2* table. This limits the height of the blade, allowing you to make repeatable cuts.

depends on what stock you're cutting and the blade pitch.

THE NITTY GRITTY. Before we talk about putting the *JMPv2* to use in the shop, let's dive into some of the features and adjustments on the saw, starting with the blade. The pull-saw style blade is available in four configurations, which are basically variations of teeth per inch and rip vs. crosscut. The blade is held in a clamp in the middle of the saw. The clamp mechanism is adjusted up and down via a handle on the front of the saw.

BLADE PITCH. The cutting action of the saw works because the rear edge of the blade is set to be slightly higher than the front. This pitch is adjusted with a knob under the far side of the blade. The amount of pitch depends on what you're cutting. For example — a thin piece of stock can have a higher pitch, and make a through cut in one motion. To cut a thicker, or harder, piece of stock, the pitch needs to be lower to allow the teeth to clear out the sawdust between passes.

HEIGHT & TILT. While we're talking about stuff under the table, let me mention that there's an included depth stop that you can use to set a repeatable blade height. This is useful when cutting things like dovetails.

Another useful feature is that the blade tilts up to 45° both left and right. A series of included flip stops allows you to set repeatable angles.

SLIDING TABLE. The sliding table on top is one of the more interesting features. It's seperated into two parts (left and right), and a fence connects them. The standard fence and stop blocks have angled faces that hold the workpiece down. Also included is a flat-faced fence. Loosening a pair of metal brackets allows you to angle the fence (they move independently) to make accurate miter cuts. *Bridge City* does offer an upgraded fence for the *JMPv2* that includes additional features.

Oneida Air Systems
The Industry Leader in Dust Collection

SUPER DUST DEPUTY®

Turns your single stage dust collector into a cyclonic super collector!

For 1HP - 3HP Single Stage Dust Collectors

- Pre-separates 99% of dust & debris before it reaches your collector
- Maintains continuously high airflow to your tools
- Saves money on replacement filters
- Eliminates downtime needed for filter and bag cleanings

DUST DEPUTY DELUXE®

Turns any wet/dry vacuum into a cyclonic super vacuum!

- Now 20% more efficient with Neutral Vane Technology
- Pre-separates 99% of dust & debris from the airstream
- Eliminates clogged filters & suction loss
- Saves time & money on expensive replacement filters & bags

oneida-air.com

MADE IN THE USA SINCE 1993

MAKING CUTS

After you've done a little setup on the *JMPv2* (there's only a few knobs and such to put on), you're ready to make your first cuts. As with any type of straight cuts, you're either looking at cross cuts or rip cuts.

CROSS CUTS. Making cuts across the grain is pretty simple. You start by setting the pitch of the blade. The adjustment knob under the blade raises or lowers the back side of the blade. For thin, square stock (½" and under), you simply adjust the rear of blade to be 1/32" above the workpiece. For wider, thicker, or dense stock, I found raising the back of the blade 1/16" seemed to work well in most scenarios.

Once the pitch is adjusted, you can set the blade height. You want the front teeth on the blade to be below the table. Then, it's as simple as pushing the sliding table forward, across the blade (left photo below). To keep cutting deeper, simply pull the table back, and raise the blade height by one turn of the adjustment handle. Then, it's a rinse and repeat until the cut is finished.

RIP CUTS. The process to make a rip cut is nearly identical, but I found it was better to use a less aggressive pitch for these cuts. At least, using the standard blade that comes with the *JMPv2.* The dedicated rip blade would probably give a better result.

With most rip cuts, you'll only be able to use one clamp block. But to be honest, even making a cross cut, I found one clamp block was enough. You're also limited to about 6" long pieces for ripping (lower right photo).

DOVETAILS

One of the biggest benefits of the *JMPv2* is that it makes a very precise cut. The ultra-thin blade and hand tool nature of it means you can get extremely accurate results. Of course, this means that cutting tight-fitting joinery is one of the things this tool excels at. It is labeled the *Jointmaker*, after all.

TAILS FIRST. Cutting dovetails starts by laying out your dovetails as if you were hand cutting them. Then, you adjust the blade angle to match the angle of your dovetail. In the left photo on the next page, that angle is 10°. With the straight fence installed, you can lineup the blade with your layout lines and clamp it in place. I found an F-style clamp to be the best here.

Now, you simply cut the tails, cranking the height handle between each pass. The included depth stop can be used to ensure that each cut is exactly the same depth. Instead of resetting the blade angle to the opposite direction, I simply flipped my workpiece around to create both sides of the tails. Before chopping away the waste, you can reset the blade to 90° and cut the outside shoulders (main photo, previous page).

PINS NEXT. With the tails cleaned up, pins are next. Here again, you're in hand-cut mode, meaning you're going to need to transfer the tail shape to the pin board. After that's done, you can adjust the fence on the *JMPv2*. To do this, loosen the knobs on the back of the fence and angle it in relation to the blade. Use a bevel gauge and set it to match the tails.

Now, you'll want to spend your

▲ Cross cuts can be made by pinching the workpiece between the rear fence and the moveable stop blocks. The tapered inside faces of the fence and block hold the workpiece securely.

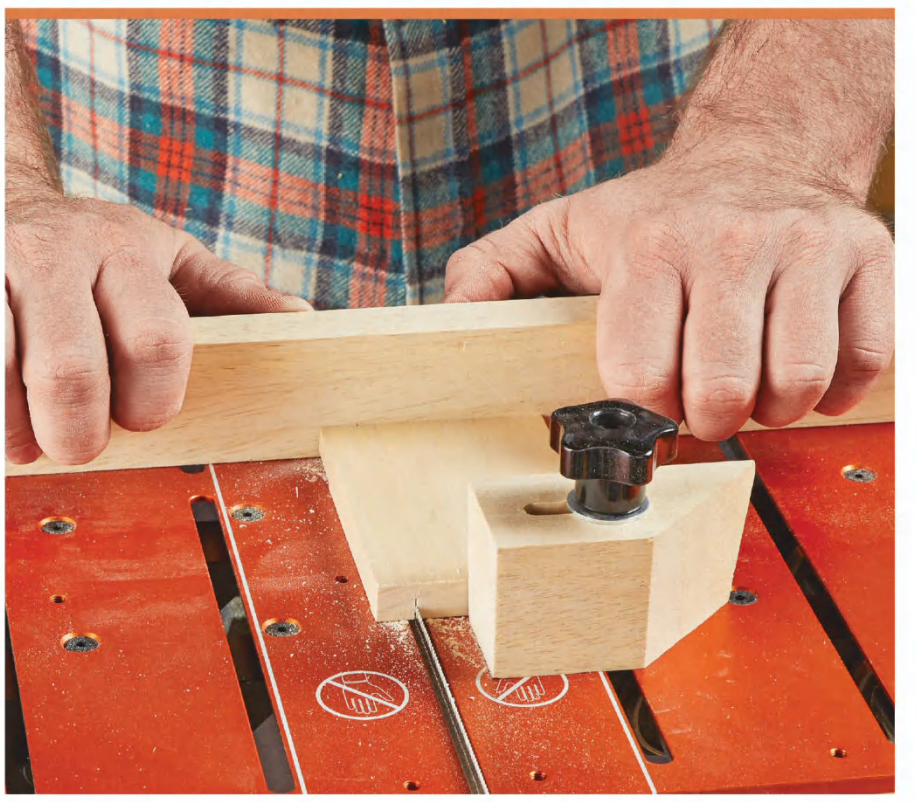

▲ Rip cuts are made in nearly the same fashion as the cross cuts. The workpiece is positioned lengthwise and clamped in place. I found a lower pitch worked better during rip cuts.

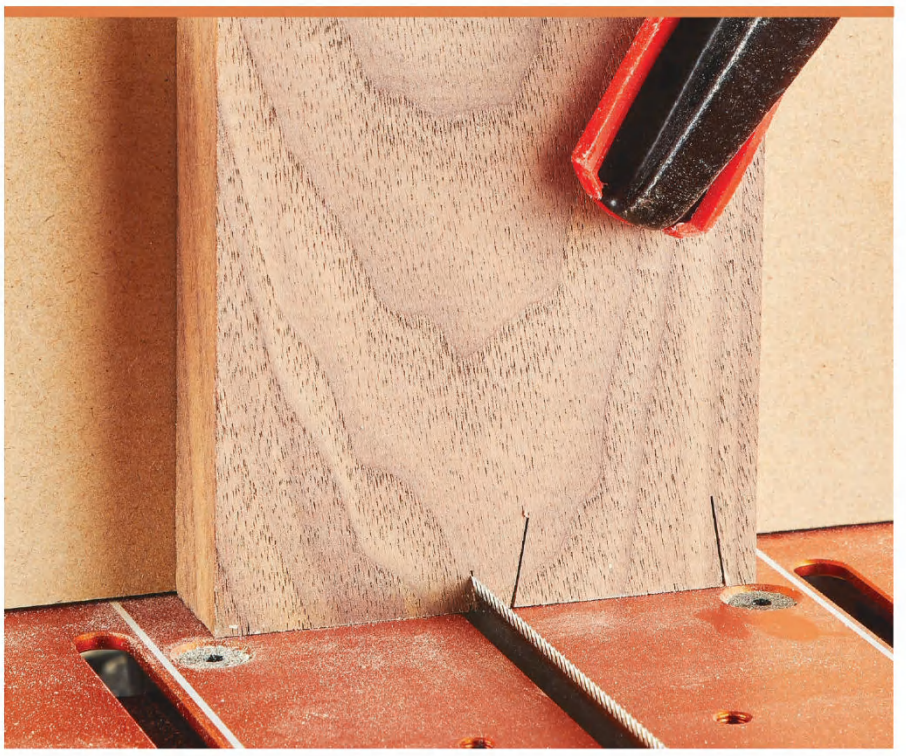

When cutting the tails of a dovetail, tilt the blade to the angle that you'd like the dovetails to be, like the 10° shown here. Flip the workpiece to cut the opposite side of the tail.

Cutting the pins can be done by repositioning the blade back to 90° and utilizing the independent tables. You can skew the fence 10° to perfectly match the angle of the tails.

time making sure you line up the blade with your transferred layout marks. This is where you should take full advantage of the *JMPv2* being a hand tool — take your time, and line the blade up in the proper location. Then, you can make the cuts, again adjusting the blade height knob between passes until you reach the full depth.

Cleaning up the waste on the pins can be a little tricky. The ultra-thin kerf requires a fret saw to saw out the majority of the waste before fine-tuning with a chisel waste. Alternatively, you could chop out all of the waste. In either case, if you're careful, the results speak for themselves.

Never lose electricity again!

Own the #1 brand in home standby power.

8 out of 10 buyers choose Generac Home Standby Generators to automatically provide electricity to their homes during power outages. GENERAC Home Standby Generators start at just $1,999.*

CALL for FREE Generator Buyer's Guide and get…

Limited Time BONUS OFFER!

GENERAC®

USA ENGINEERED & BUILT*

*Built in the USA using domestic and foreign parts

TOLL FREE 800-731-0399

FreeGeneratorGuide.com

*Price does not include installation.

THE SKY'S THE LIMIT

As you can see, the *JMPv2* lives up to its name. It works extremely well for cutting joinery, but there's some other areas where it excels. Two examples are shown below.

THIN, REPEATABLE CUTS. The laser-thin kerf of the pull saw blade works very well for precision cuts. In the top workpiece below, the kerfs are spaced out ⅛" of an inch apart. Combining these cuts with an offset series on the opposite face leaves you with a piece of stock than can easily be bent into nearly any radius. Something like this would make the perfect front for a curved box to receive veneer.

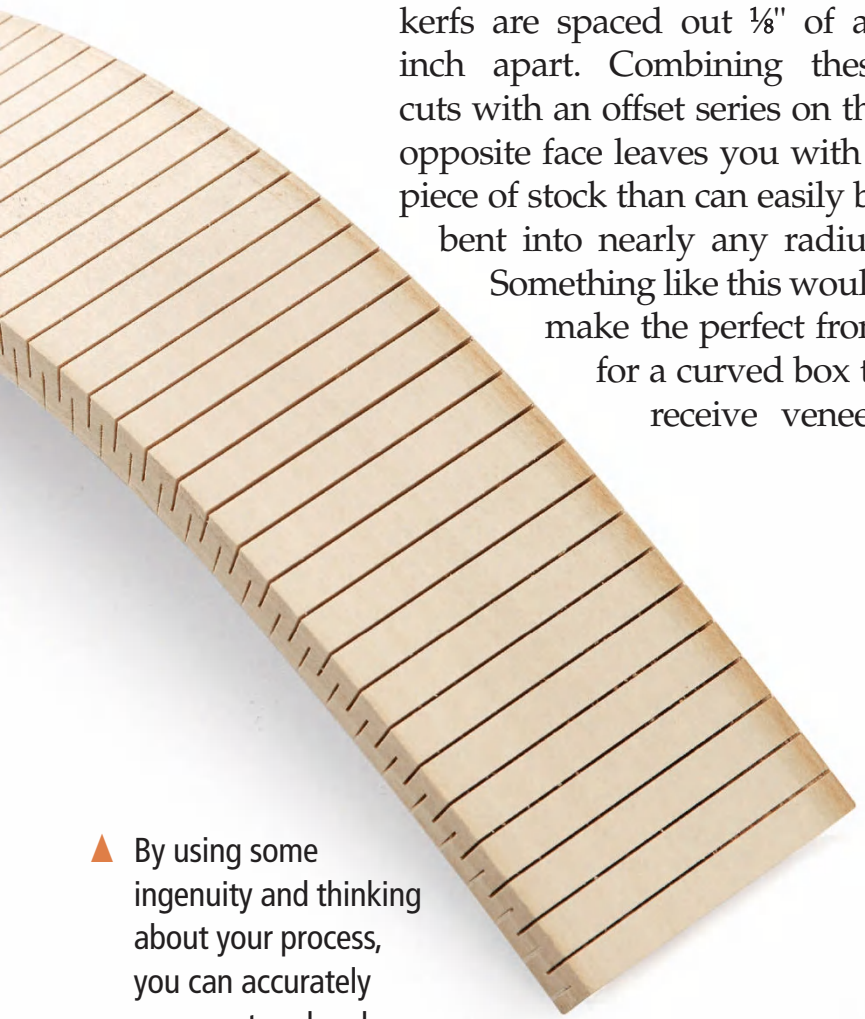

▲ By using some ingenuity and thinking about your process, you can accurately space out and make repeatable cuts.

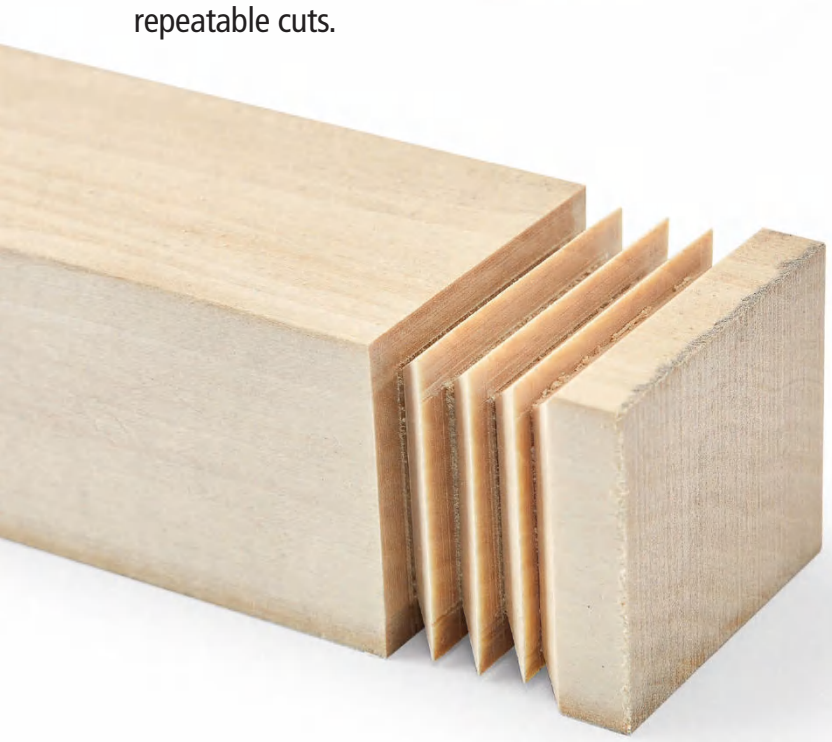

▲ The extremely thin pull saw blade allows you to make cuts and nearly ignore the thickness of the kerf. This allows you to make sharp corners, where a table saw would leave a flat bottom.

The tighter the kerf spacing, the tighter the workpiece will bend.

While making cuts like this would be much easier with the upgraded fence (it has integrated stops) offered from *Bridge City Toolworks*, simple spacing like this can be done by placing a piece of masking tape on the sliding table and marking a line. Then, it's just a matter of scootching the workpiece until the just made kerf lines up with the mark.

MIND-BOGGLING CUTS. Another benefit of the thin blade is that you can make cuts that would be extremely difficult to do by hand. One example can be seen in the lower photo. To create this series of decorative ridges would require a specialized router bit. With a standard table saw, the thickness of the blade kerf wouldn't allow you to create thin, sharp details like this. With the *Joint Maker Pro*, it's no problem. It just takes a little bit of planning and some sneaking up on the cuts.

OVERALL THOUGHTS

Being able to use the *Joint Maker Pro* for a couple of months gave me some pretty good insight into how it works. There are a few things that I really like about it, and a few things that I wish came standard.

MY WANTS. First off, for the *Joint Maker Pro* to be ergonomic to use, it needs to be set up at around waist height. Unfortunately, I had a hard time coming up with a solution to this, but finally found a set of sawhorses that worked. In my opinion, the stand for the *Joint Maker Pro* should probably be a standard feature instead of an add-on.

Another add-on that I think would bring the *JMPv2* to the next level is the optional fence. I have only the standard fence for it. And it works okay. However, when it comes to making some of the complex and repeatable cuts that you really want the *JMPv2* for, I think the *Precision Fence System* would be handy.

Of course, both of these wants are available, they just cost a little more. And, if you're spending the price for the *Joint Maker Pro* (currently, around $750), shelling out more money for the fence and stand is a harder pill to swallow.

MY LIKES. Initially, I thought I would walk away from the *JMPv2* thinking it was a fun toy, but that's about it. Honestly though, I really enjoyed it. I could see how someone would use the *Joint Maker Pro* in their shop. Now, it's not a perfect substitute for a table saw, and it doesn't claim to be. But what it is, is a tool that makes extremely accurate cuts, with all the pleasure of a hand tool experience.

IS IT RIGHT FOR YOU? So, should you, as a woodworker, buy one? That's a hard question to answer. First I would ask a couple of questions. Do you like the hand tool experience? Do you enjoy making smaller projects that you can really show off your precision? I know if I concentrated all of my woodworking endeavours on small projects like boxes, humidors, jewelry boxes or the like, then absolutely, the *Joint Maker Pro* would have a place in my shop.

Yes, it's an expensive tool. And believe me, someone will be upset about me talking about a tool this expensive. Regardless, what I will tell you is that there are no tools in my shop that gives me the same level of precision as the *Joint Maker Pro*. If you can imagine a cut, and see a layout line that you're trying to cut to, the *Joint Maker Pro* will allow you to make that cut accurately, and with confidence. W

OUR BOND IS OUR WORD

You're serious about your woodworking projects. So are we.

Titebond wood glues offer the proven performance, respected advice and trusted solutions you demand. We remain committed to being there with you for every project.

Titebond®

titebond.com | 1-800-347-4583

01105_5227TF

Crooked Knives

Inspired by traditional knife styles, these unique knives offer a sweet addition to your carving kit.

Spoon carving occupies a curious corner of our craft. Within the last five years, I've seen more and more woodworkers make at least one. Some are hooked ... and one of those would be me. Carving a spoon or small bowl forms an interesting diversion from my typical straight, flat, and square projects.

You can carve a spoon with just about any sharp knife. My first very first were shaped with my trusty *Swiss Army Tinker*. The only tool-related obstacle is forming the bowl. A straight-bladed knife gets you only so far. What you need is a knife made for diving in. Crooked (or hook) knives feature blades with varying degrees of sweep along the length. The versions with a gentle curve excavate material easily. Sharply curved blades extend your reach to deep recesses and tighter forms.

Thankfully, Creative Director Chris Fitch serves as both our resident carving expert and blacksmith. The knife concept quickly sparked his curiosity.

There are really two mini projects inside each knife: making the curved blade and then the handle. Chris found a simple blade-making solution for those of us who don't have a full blacksmith shop.

The wood handle offers up some solid carving practice on its own. There are three handle patterns shown here that you can choose from. The key is to spend a little time whittling, filing, or sanding the handle to suit your hand and comfort.

▲ The handle is where you turn this carving tool into a custom creation. We show three styles to get the ball rolling: horned, oval, and whale shaped. Even the handle material is up to you.

Written by: Phil Huber; Project Design: Chris Fitch

Illustrations: Bob Zimmerman

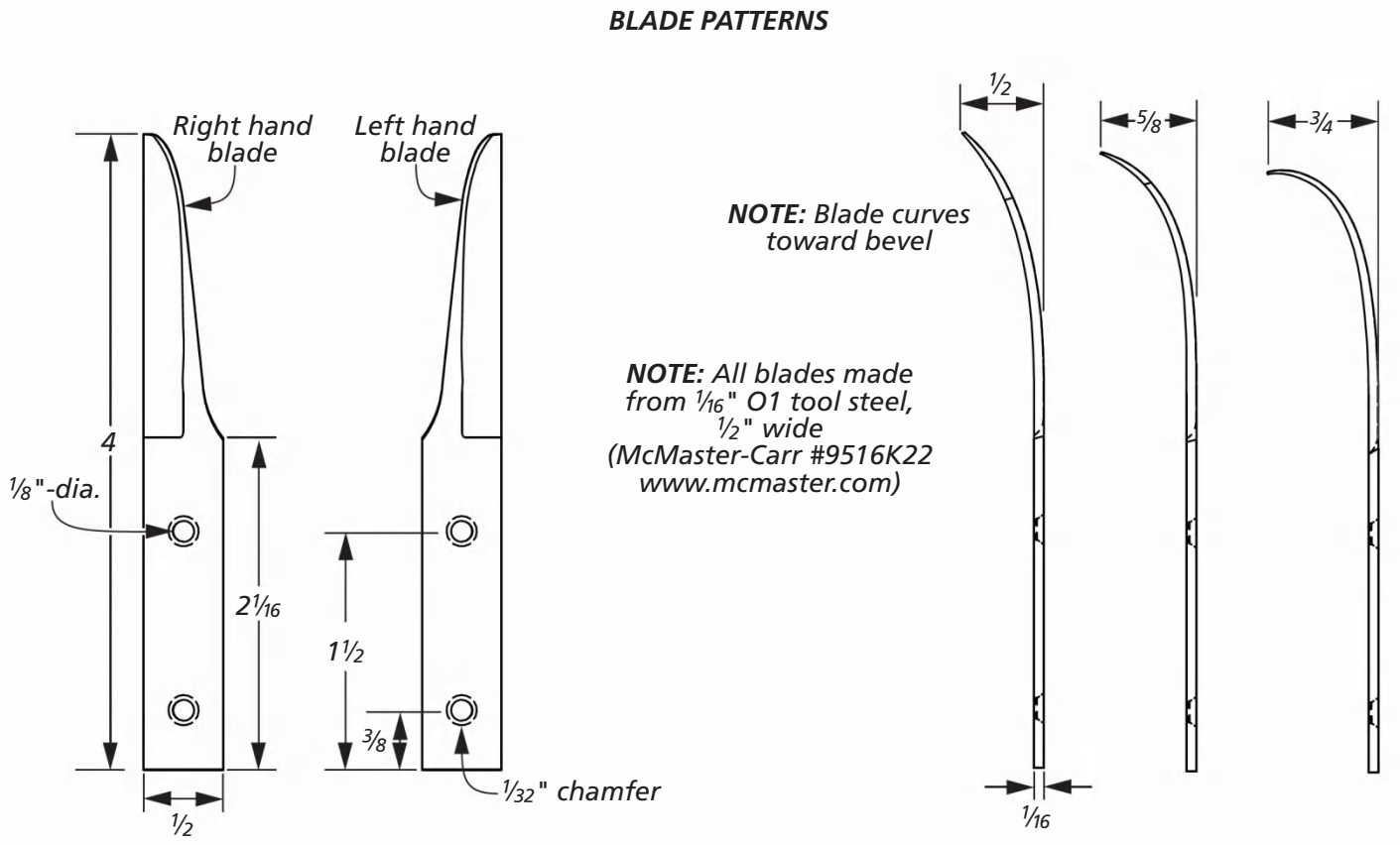

Making the HOOKED BLADE

Making knives goes from difficult to easy, metal to wood. But don't take that to mean the process is time-consuming or fraught with peril. Only that working with metal requires a different set of steps that you don't use when making something from wood.

START WITH GOOD STEEL. My initial thought of making the knife blade conjured images of hammers, tongs, and fire. Chris' version starts with a blank of O1 tool steel from McMaster-Carr (our secret supply source). Using ½"-wide, 1/16"-thick bar stock minimizes the amount of cutting and shaping that you need to do.

PICK A PATTERN. The drawings above show three different sweeps for the blades. You can easily get all three from the stock listed. However, make only what blade you want. In any case, the process for shaping is the same. Start by cutting the blade blank to length. The drawings in the box below take over from here.

Use a punch to mark the two rivet holes that secure the blade to the handle. You also need to form an ever so slight chamfer on the holes, as shown in Figure 1 below. This allows the copper rivets to grip the blade when they're peened.

The steel blank comes annealed but it's still a good idea to drill with a slow speed and to use cutting fluid for a smooth hole and to carry away chips.

The basic shape of the blade can now be cut with a hacksaw, as shown in Figure 2. Follow as close as possible to the pattern you mark on the blank.

Refining the shape and working down the layout lines comes next and depends on your equipment. You can get it done quicker with a grinder or disc sander. Keep a cup of water nearby to cool the blade as necessary.

However a couple of files work just fine, too. Getting a smooth, even profile is much easier now than when the blade has been hardened later. So slow down to get it right.

ROUGH SHAPING THE BLADE

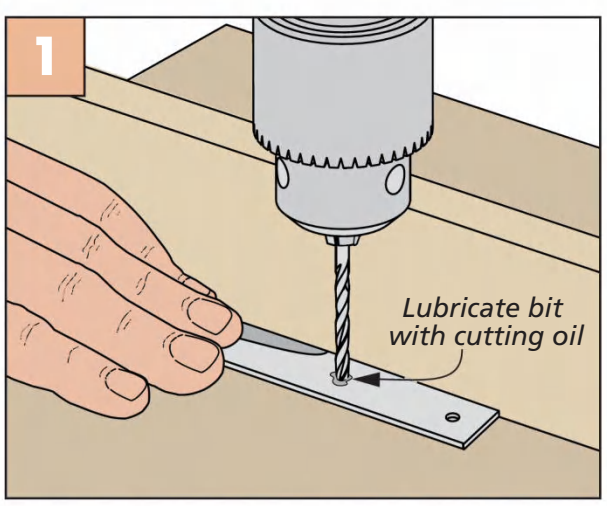

Cut the Blank to Rough Size. Mark the blade profile and mark, drill, and countersink the mounting holes.

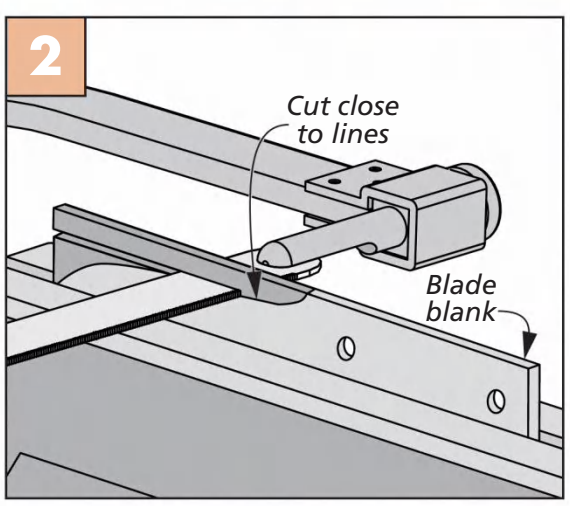

Shape the Blade. A hacksaw takes care of the bulk of the waste. Then using a file, work to the layout line.

BEVEL & CURVE

To go from blank of steel to a carving tool blade, you need to shape a cutting bevel. You can do this with files or a small grinder. A grinding wheel in a rotary tool, like a *Dremel*, works very well here, as you can see in Figure 1 at right. Another option is to use a narrow belt sander.

This isn't your final cutting edge, so your focus is on establishing the bevel, not creating a razor-sharp edge.

To add the curve to the bevel side of the blade, gently form it with hammer blows over the horn of an anvil, an iron pipe clamped in a vise, or around the curved top of the jaws of a machinist vise, as in Figure 2.

Once again, take your time here. You want to avoid work-hardening the metal with too many heavy blows. This can lead to the blade becoming brittle and breaking.

HARDENING THE BLADE. The bevel you formed will cut wood at this point. (Or yourself, so watch it.) The problem is the blade won't hold that edge for long. What's needed is to transform the blade from soft(ish), annealed steel into a hard tool.

To add toughness, heat the blade with a torch until it's bright orange along the cutting edge, as in Figure 3. You can do this with a propane torch. Though I find that a MAP gas torch works quicker and helps you heat the entire blade more uniformly.

Clearly, the blade is gonna get hot, so hold it with locking pliers to keep your hands safe. I like working in a slightly darkened room to better monitor the color of the blade as its heating.

Once you've reached an even color, it's time to lock in the hardness. This is done by quickly quenching the blade in oil (Figure 4). That's what the "O" in O1 steel stands for, "oil-quenched."

Chris likes using a can of old motor oil for this, but even cooking oil (like peanut oil) will work. Swirl the blade in the oil until it has cooled off.

Quenching makes the blade quite hard. The downside is that it's now brittle and tough to sharpen. What we want to do at this stage is to dial back the hardness, while making it tougher. So let's head to the kitchen.

HEAT TREATING. Step one, warn the household that you'll be hardening tool steel. The process creates an aroma. It isn't bad per se, but not everyone may be a fan. Preheat the oven to 350°. Place the blade in the oven for two hours until it takes on a uniform straw color. Then remove the blade and allow it to cool.

SHARPENING, PHASE TWO. If you look closely, you can see that the blade still has the grinding and file marks from the initial shaping. You can polish and refine the face and bevel of the blade until you run out of patience. Sharpen the edge, too.

We'll leave the final sharpening and honing until after the blade is mounted to the handle. The completed knife is easier to hold for honing and you have a better sense of how sharp it is with test cuts.

COMPLETE THE BLADE

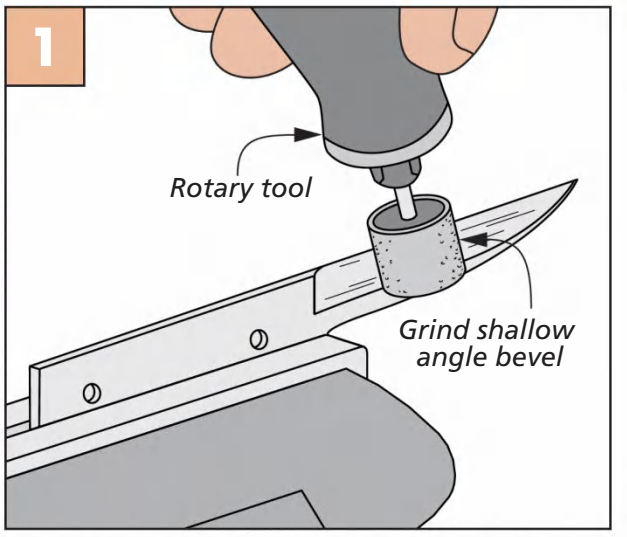

Grind the bevel. You can use either a rotary tool with a grinding wheel, a selection of files, or a narrow belt sander.

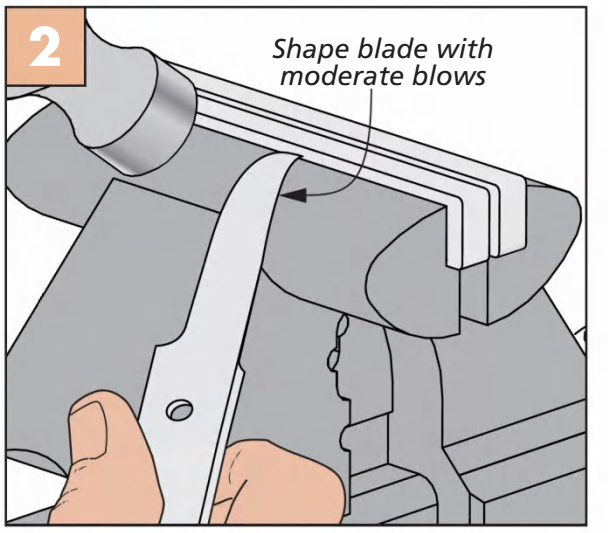

Cap it. Gently hammer the blade over a curved surface such as the horn of an anvil or the curved jaws of a vise.

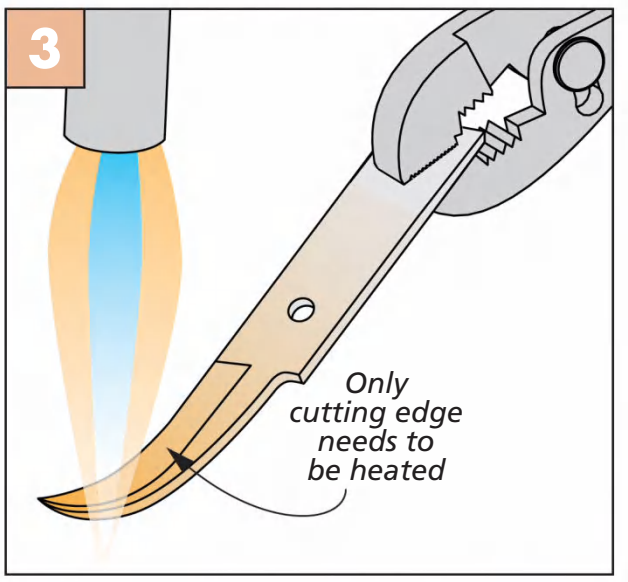

Heat it. Sweep a propane torch back and forth along the cutting edge of the blade until it glows uniformly orange.

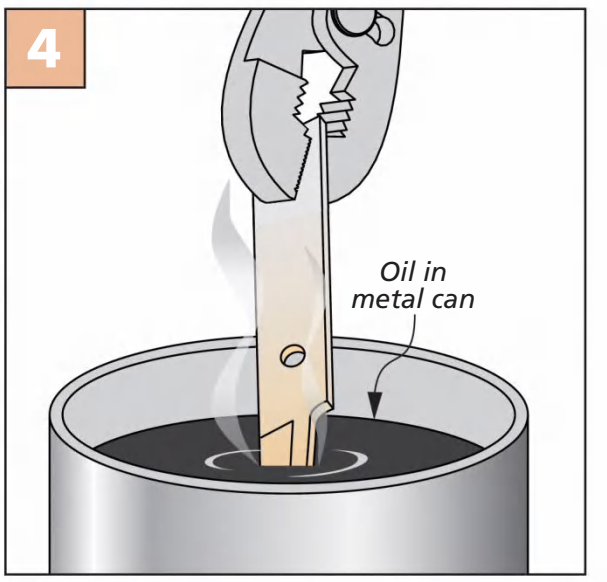

Quench it. Dip the blade in a can of used motor oil. Finish by heating the blade in a 350° oven for two hours.

A custom HANDLE

The handle forms the woodworking part of this project. Nearly any wood will work for the handle. Chris used maple, beech, and oak for the ones shown here.

BLADE MORTISE. The starting point is to make a home for the blade on the bottom face of a handle blank. Place the blade on the handle and scribe the perimeter with a marking knife or a utility knife, as shown in Figure 1.

Then create a shallow mortise. I used a router plane. Another option is to drill out the waste and clean up the mortise with a chisel (Figure 2).

The point is that the blade fits snug in the mortise and is flush or slightly recessed in the handle. Use the holes in the blade as a guide for drilling the through holes in the handle.

HANDLE SHAPING. Transforming the handle from a square blank into something that's comfortable to grip is up next. I've included the three styles of handles that Chris came up with on the next page. Of course, you are encouraged to create a handle shape entirely on your own.

As much as I like carving, I do like to get the bulk of the material out of the way quickly. So I copied a pattern and taped it to the top and side of the blank. At the band saw, cut close to the pattern lines. Then with a knife, files, and sandpaper, refine the shape until it's comfortable in your grasp. I find that a little texture offers better grip and control.

JOIN THE BLADE & HANDLE. Time to bring the two parts together into a custom carving tool. The box below covers the steps. Insert the blade into the mortise and slip a pair of rivets down through the handle. Cut off any excess until there's a scant 3⁄16" past the blade.

To lock the blade and handle together, we'll use the relative softness of the copper rivet to our advantage. Place the handle on a flat metal surface, like the anvil

CREATE THE BLADE MORTISE

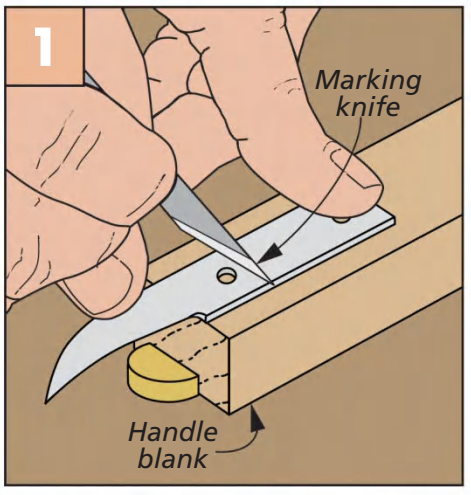

Scribe. Trace the perimeter of the blade with a knife then mark and drill the holes.

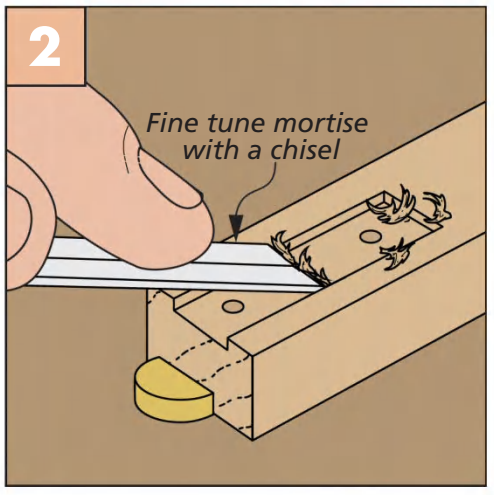

Mortise. Create the 1⁄16"-deep mortise by drilling out the waste and cleaning up with a chisel.

SECURE THE BLADE TO THE HANDLE

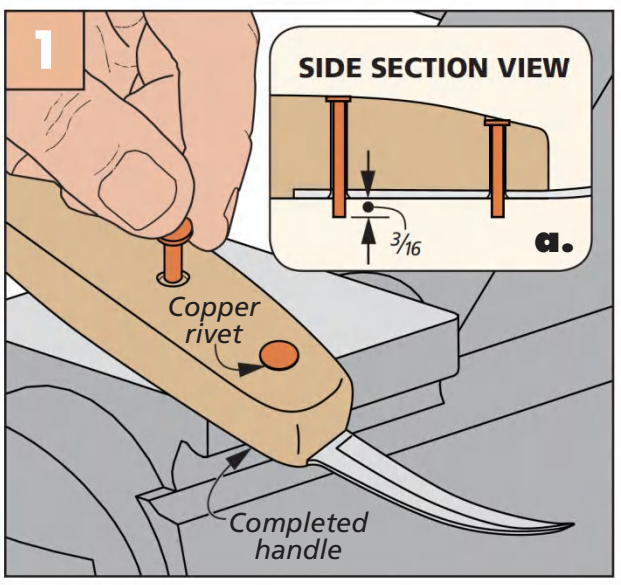

Set Rivets. Install the blade and slip copper rivets through the handle. Cut the rivets leaving 3⁄16" past the blade.

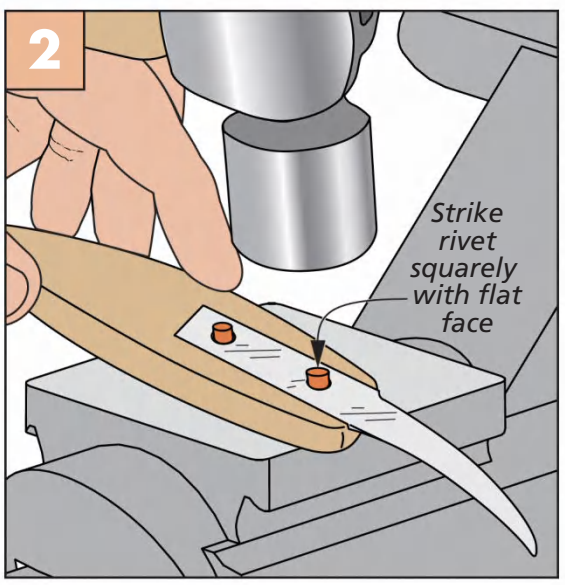

Hammer. Using the flat face of a ball-peen hammer, swell the rivet inside the handle and blade.

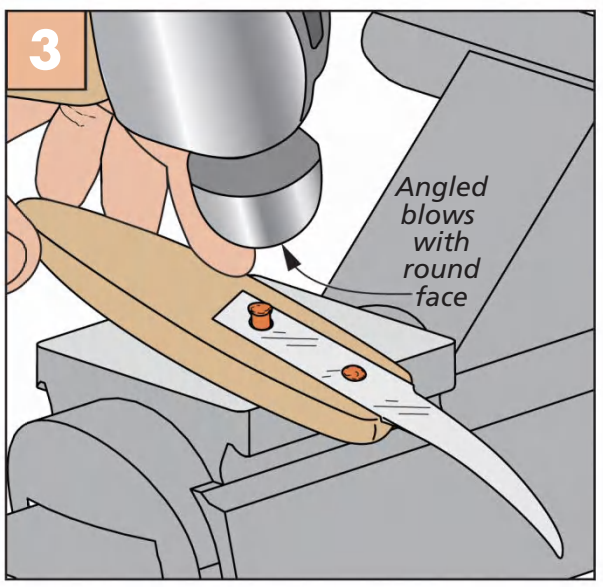

Peen. Peen the rivet, locking the blade in place with the round face. File the excess smooth.

of a machinist vise. Then strike the end of the rivet with the flat side of a ball-peen hammer. This swells the shaft of the rivet to fill the hole in the blade and handle. You should be able to see this happening.

Then flip the hammerhead around, and use the rounded side to peen the rivet, flowing the copper into the countersink. This isn't time to channel your inner Norse god. These are medium blows meant to work with the metal. Once you see that the countersink is filled, you can pick up a file and dress the excess rivet flush with the surface.

All that's left now is to give the blade a final honing. With it on the handle, you can get a much better feel for the sharpness by making a test cut or two.

Apply a finish? Maybe. I like a coat of boiled linseed oil or perhaps a little beeswax. Maybe even some paint to dress up the look. The best finish is the worn patina of an oft-used, well-loved tool. W

Handle PATTERNS

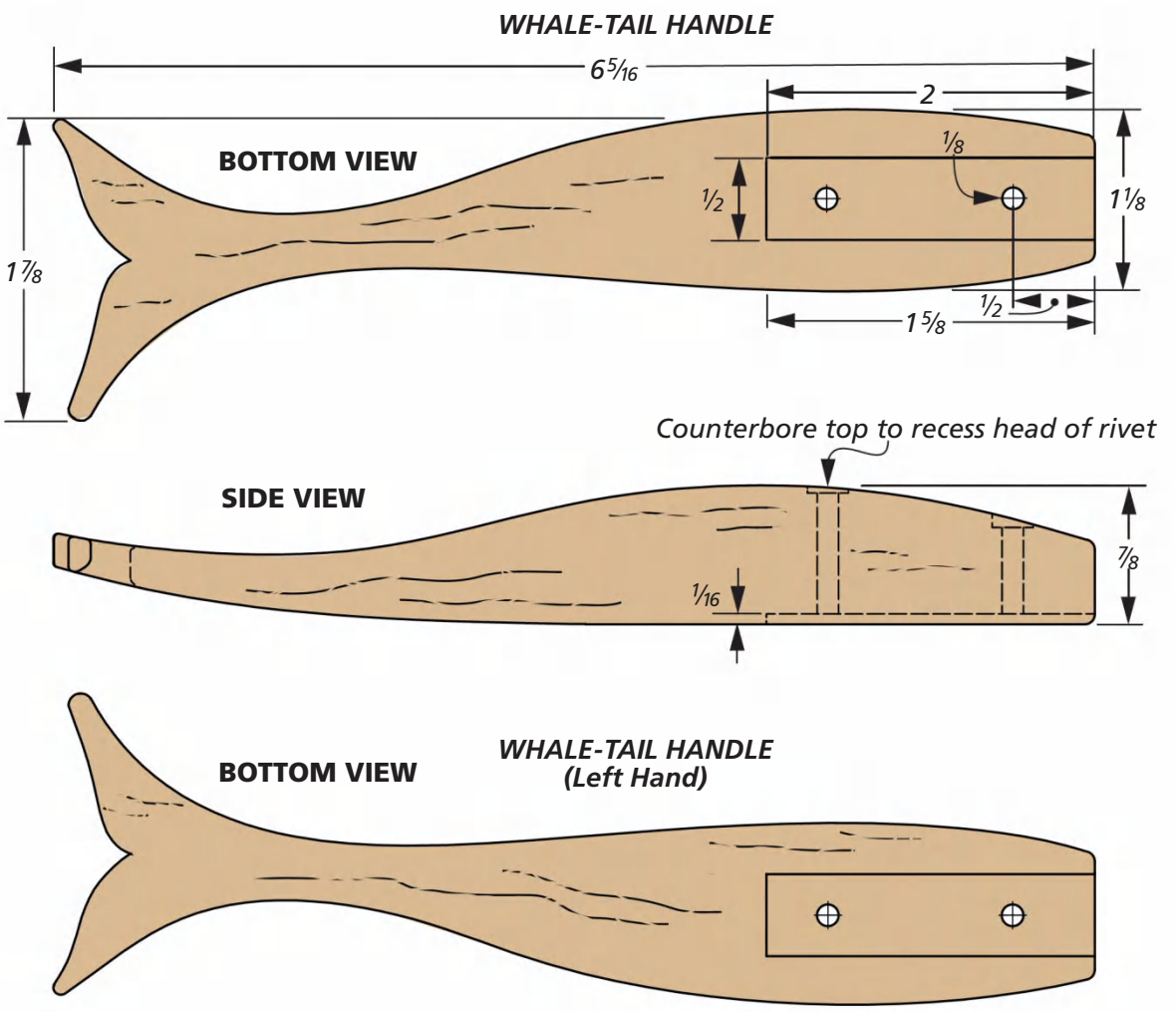

NOTE: 1/8"-dia. x 1" copper rivets from McMaster-Carr #97440A345 (www.McMaster.com)

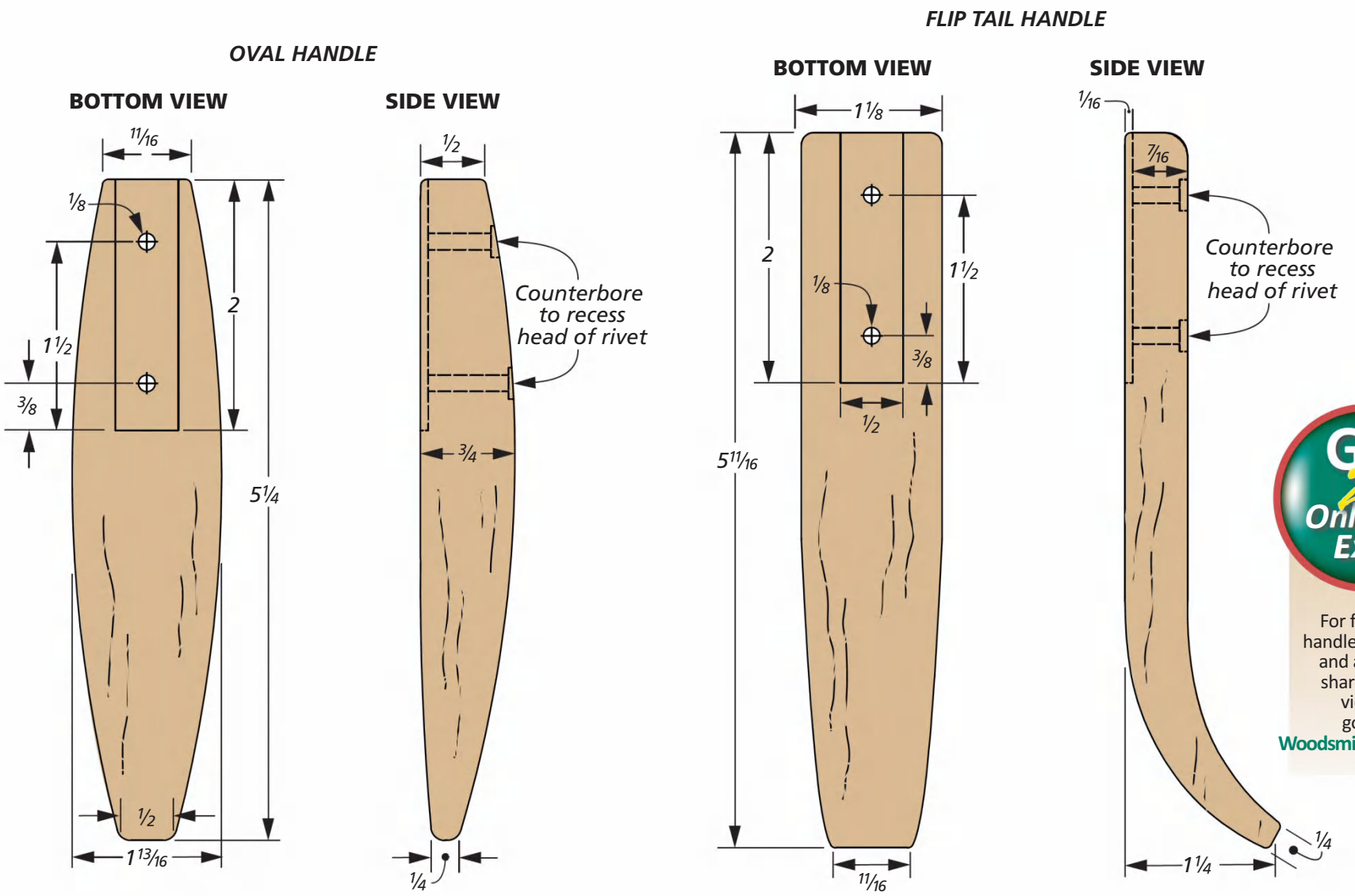

GO 2 Online Extras

For full-size handle patterns and a blade sharpening video, go to: Woodsmith.com/255

Bathroom Storage Cart

This little bathroom cart is the perfect solution to any area that needs a little extra storage. The stainless steel accents add a modern twist to the overall design.

Storage needs in a bathroom are pretty minimal — a few toiletries, towels, and a handful of rolls of coveted toilet paper are the normal things to keep at hand. In a bathroom that features a pedestal sink, storage for these types of items is usually lacking. And it was that need for storage that led us to the storage cart you see here.

CLEAN, SIMPLE STORAGE. As you can see in the photo at right, the cart features three shelves that pack in storage that's easily accessible. A pair of stainless steel rods guard each shelf to keep the items in place if you roll the cart around. The top of the cart not only acts like a shelf as well, but it also features two small stainless steel rods that do double duty — they can serve as handles to move the cart, or the perfect place to fold up and hang a small hand towel.

The cart itself is small, compact, and perfectly sized to slip between a pedestal sink and the wall. But, don't let its size fool you. It's a fun build that packs in some great woodworking that you can take with you and apply to other projects. So, let's head to the shop and get started.

▲ The stainless steel rods are a good contrast to the walnut used on the cart. The rods on the top of the cart do double duty — they can serve as handles or a place to hang a towel.

▼ Notch and tenon joinery creates not only a strong, rack-free joint, but also one that looks great as well. The mortised-in casters allow you to roll the cart out to access the shelves.

Written by: Logan Wittmer; Project Design: Dillon Baker

Illustrator: Becky Kralicek

Start with the SIDES

The cart construction starts with the sides. They have a series of notches and dadoes cut in them to accept the shelves. Because of the small size of this cart, it's a good chance to use some material that you might not normally use. In this case, we used walnut.

STOCK PREP. After selecting your stock, spend time squaring it up. Joint one face and edge, then rip it to width. Next, plane the stock to thickness and cut it to final length. I know someone will shame me for it, but I make most of my finished cross cuts at the miter saw. In my experience, it will give you just as clean of cut as a table saw if you use a sharp blade.

DADO & NOTCH. Now, cut the joinery in the sides. As I mentioned before, these are dadoes and notches. You can see these in the main drawing and detail 'a.'

To cut these, set up a dado blade in your table saw. Set the rip fence as a stop and guide your workpiece with the miter gauge to make the dadoes (Figure 1).

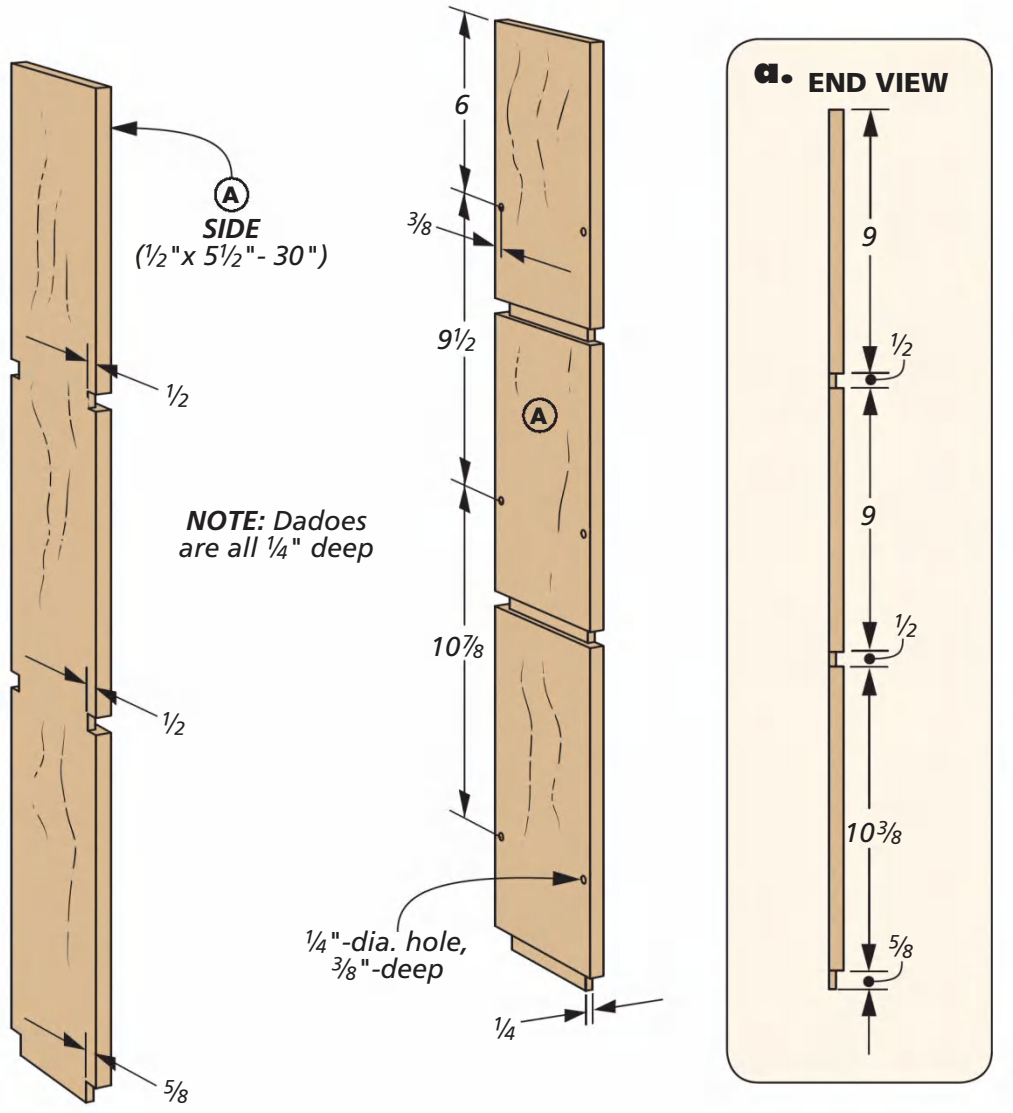

After making one dado, flip the workpiece on edge and cut the notches (Figure 2). You'll make these cuts in both workpieces before adjusting the position of the fence for the next dado. Note that the bottom dado is wider. Because it's on the end, it forms a rabbet and you'll need to set up an auxiliary fence to make this cut.

ROD HOLES. The last step before moving to the shelves is to drill the holes for the stainless steel rods. Do this at the drill press with a brad-point bit.

CUTTING THE DADOES

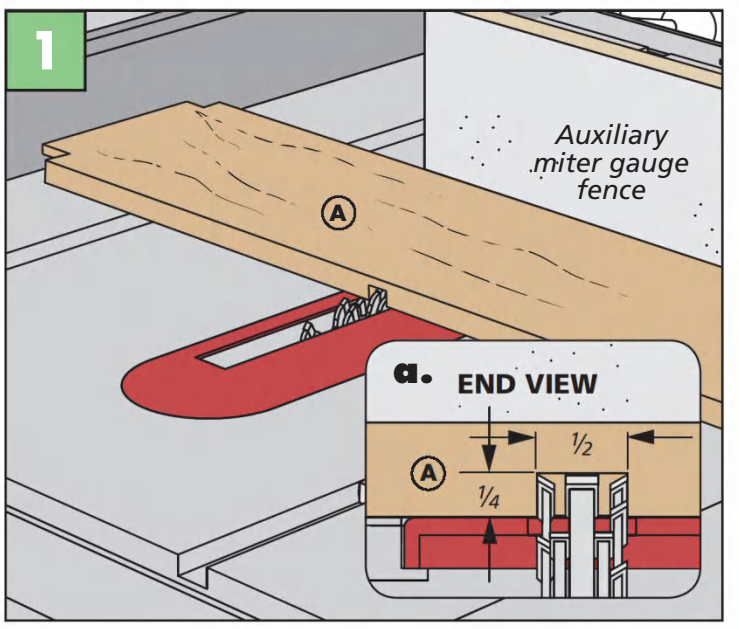

Dadoes First. Use a dado blade to cut the dadoes in both of the sides. Use the fence as a stop and guide the piece with the miter gauge.

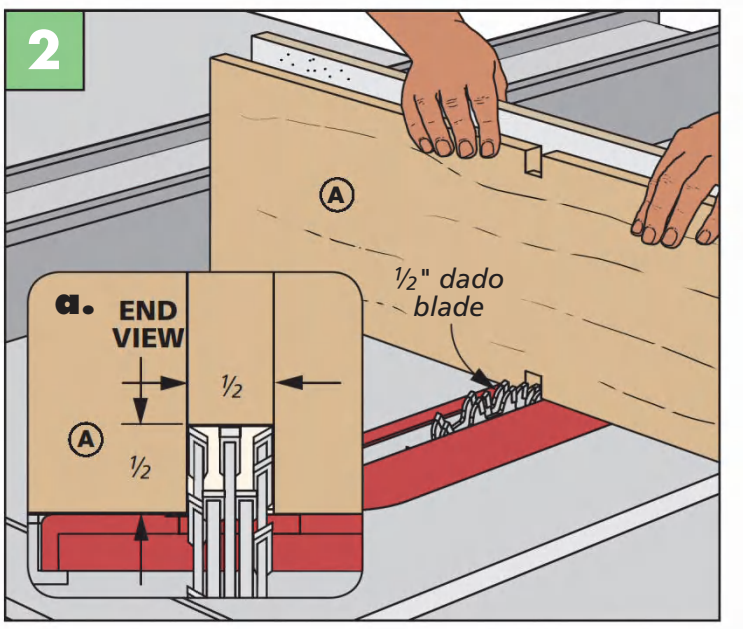

Notches. Before moving the fence between dado cuts, flip the workpiece on edge and create the notch, again using the fence and miter gauge.

SHELVES

The two middle shelves and the bottom (shown later) are made from one solid piece of stock. They have tenons on each end that fit into the notches on the sides. You'll make all three of these parts now, but the bottom gets installed a little later.

TWIN TENONS. To make the tenons on the end of the shelves, you'll stand the workpiece on end and use a dado blade to cut away the waste between them. However, the tenons are exposed through the sides, so you'll want a snug, clean fit. To achieve this, start removing the waste from the center of the shelf. As you get towards the tenon edge, set the rip fence as a stop. Then, you can make a pass with each edge against the rip fence (Figure 1) and test the fit. Then, it's just a matter of sneaking up on the perfect, gap-free fit.

STAINLESS STEEL RODS. Before slapping glue on the tenons and getting the shelves glued into the sides, you'll want to have the stainless steel rods ready. These can be cut to length with a hacksaw in a vise (Figure 2).

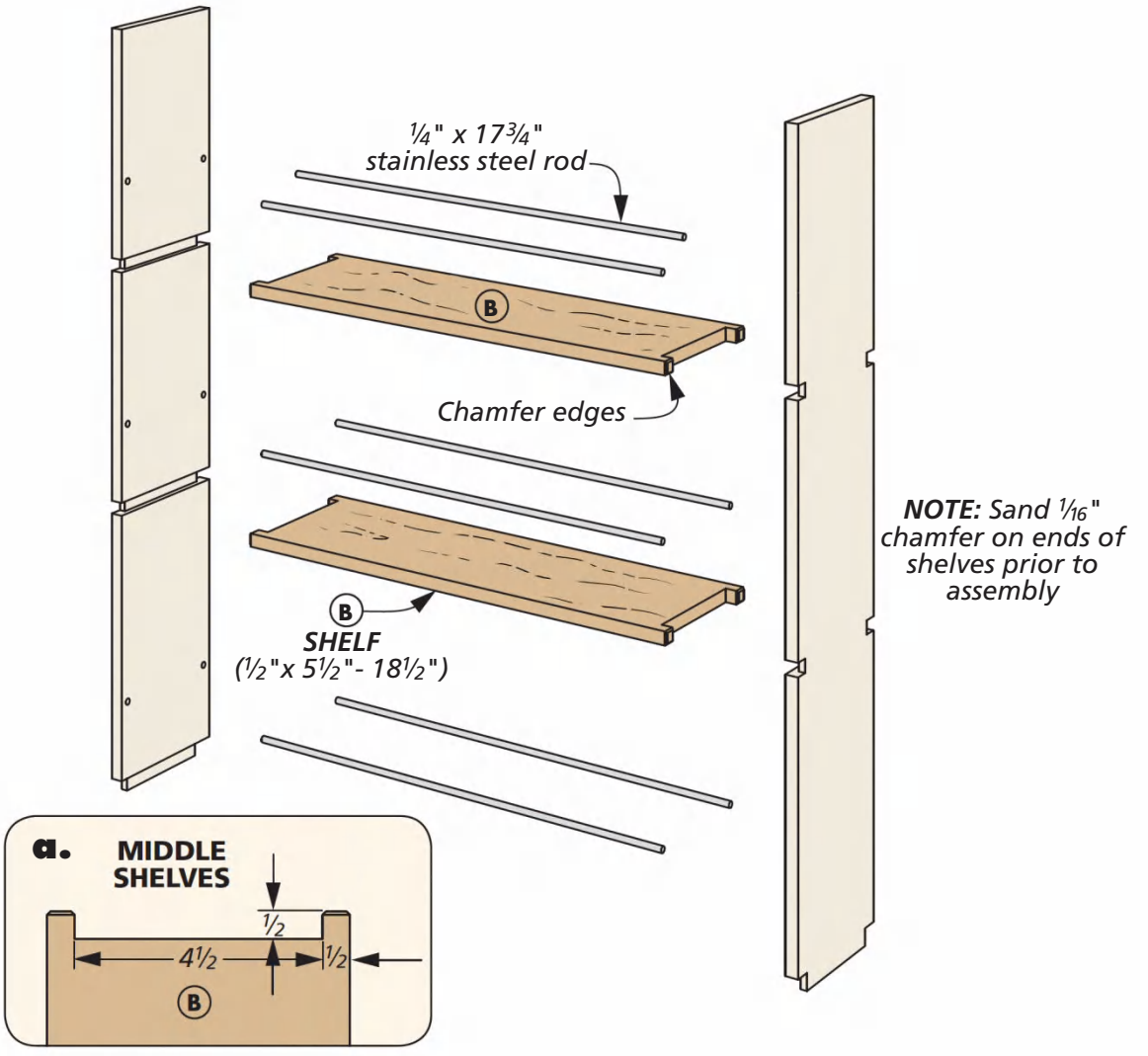

A SMALL ASSEMBLY. With the bottom set aside for now, you can assemble the two center shelves and the sides. Apply glue to the dadoes and inside of the tenons, and insert the shelves into one side. Make sure to get the stainless steel rods in place as well (even the ones for the bottom shelf). Then, apply glue to the other side and get it in place. The dadoes and notches should be pretty self-squaring, but it never hurts to check the assembly while the glue is wet and make any necessary adjustments. Now it's onto making the top and installing the bottom.

SHELF & ROD DETAILS

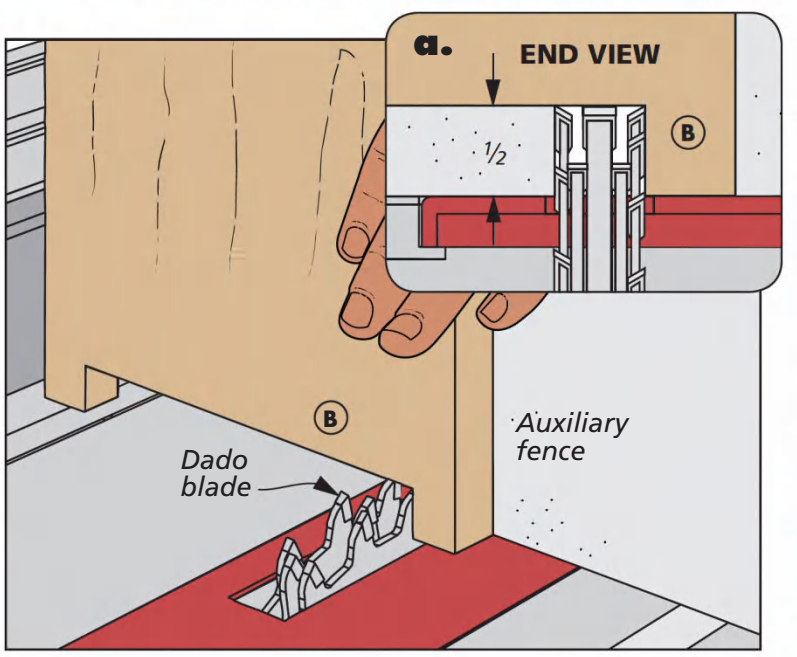

Tongues. Stand the shelf stock on end and hold it firmly against a tall auxiliary fence on the miter gauge. Cut away the waste with a dado blade.

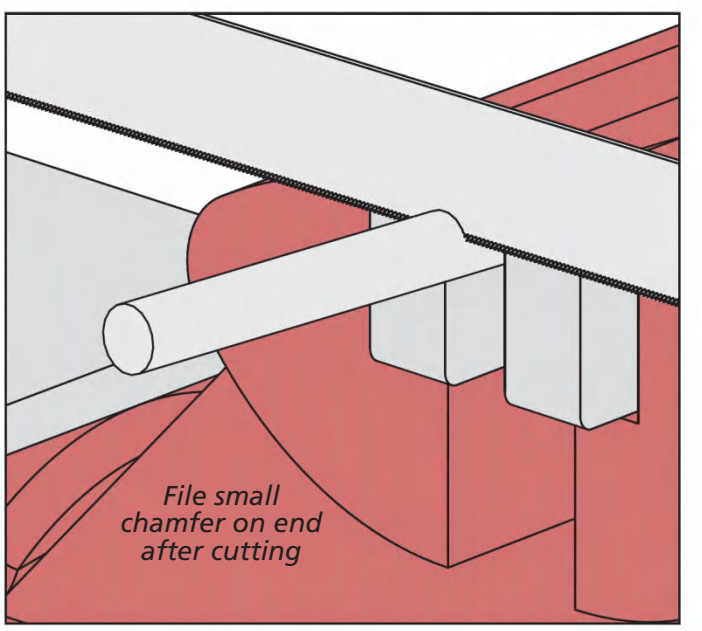

Stainless Rod. Hold the stainless steel stock in the jaws of a vise and mark the length. Use a hack saw to cut the rod to length.

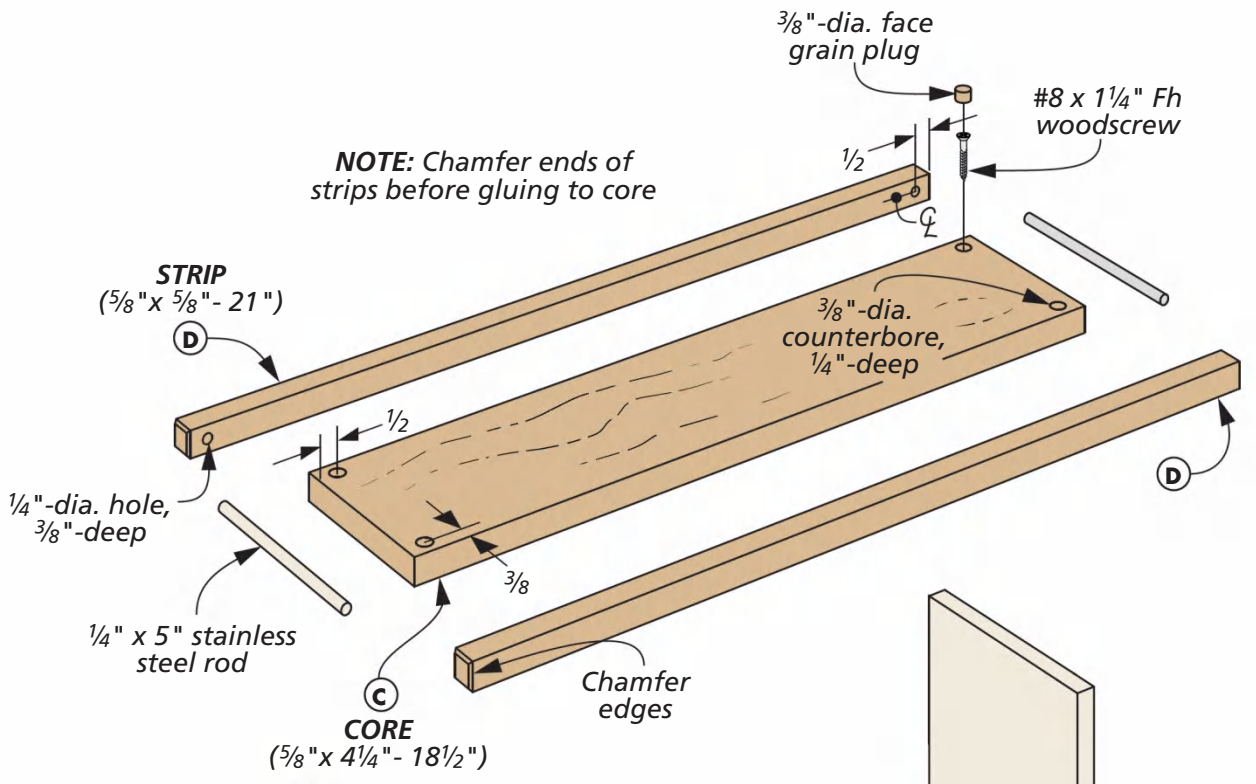

Cap it with a TOP

The top is the same design as the shelves and bottom in appearance, but with a slightly different construction method. When you cut the notches on the shelves, you may have noticed that the dado blade can leave a rough surface. It's not a problem when that surface is hidden. But on the top, it's visible, so here we'll take a little different approach.

STRIPS. As you can see in the drawing above, the "tenons" on the top are actually made from strips that are applied to a central core. This creates a clean look on all surfaces, and also allows you to install the stainless steel rod at each end of the top.

Start by cutting the strips and core to size. Spend a few minutes at the drill press and drill the rod holes on each end of the strips. Finally, cut the stainless steel to length.

Now, the top can be assembled. There's no huge secret here. Put the stainless steel into place on the strips and apply a bead of glue to both edges of the core. Clamp everything together, keeping the top surfaces as flush as possible. When the clamps come off, you can clean up any squeezeout and level out the joints with a card scraper.

PLUG THE HOLES. As you can see in the main drawing, the top is simply screwed into place. To hide the screw holes, you'll use some matching plugs. These are pretty easy to make at the drill press (Figure 1). Select some stock that has similar grain to the top when making the plugs. After popping the plugs free,

HIDDEN SCREWS

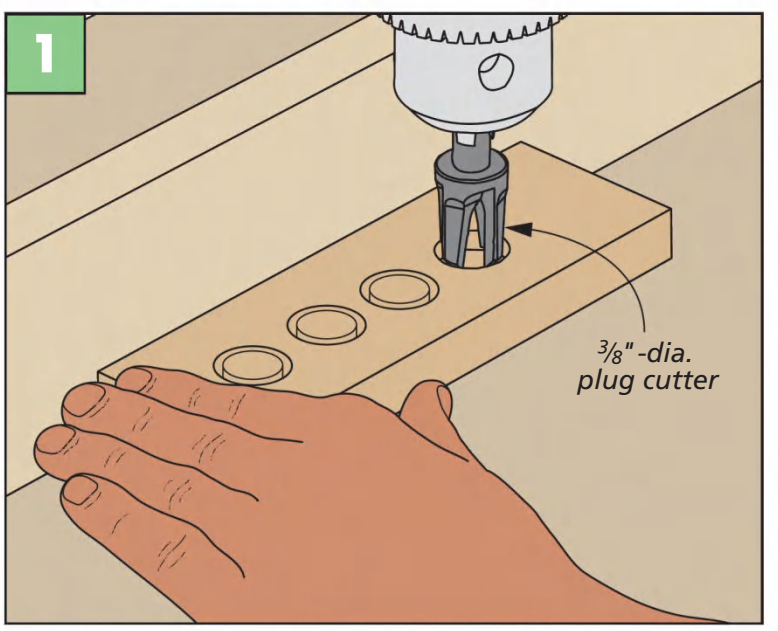

Custom Plugs. Using a plug cutter, cut plugs from the same stock used for the core. Pick grain that closely matches the grain used on the core.

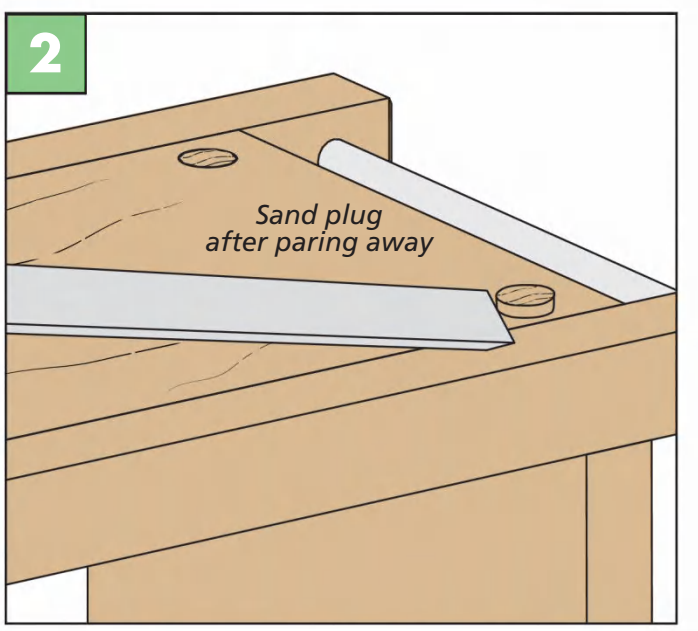

Flush Plugs. After gluing the plugs into place, use a chisel to pare the plugs down, flush with the top. Sand them until they're smooth.

screw the top into place and glue the plugs into the holes, keeping the grain aligned.

Once the glue is dry, use a chisel to trim the plugs and sand them flush (Figure 2 on the previous page). A good trick I picked up from my high school shop teacher, Mr. Allman, is to use a dark colored pencil to continue a few grain lines from the main workpiece through the plug. When done correctly, it really blends the plug into the surface, making it nearly invisible.

ADD THE BOTTOM

Now, we can circle back to the bottom of the cart. The final thing to take care of on this piece is to mortise in the casters. This can be done a few different ways. If you're using a friendly wood, you can chisel the outline and use a router plane to remove the waste. Otherwise, you can use a Forstner bit to remove the bulk of the waste and cleanup any left over bits with a chisel. Once the caster mortises are done, you can glue the bottom onto the cart.

APPLY FINISH. With construction wrapped up, the only thing left to do (other than screwing on the casters), is to apply finish. For our cart, we first applied a coat of garnet shellac. This can be applied by brushing, wiping, or spraying. I love traditional methods, so I sprayed the shellac on. Any over-spray that lands on the stainless steel rods can easily be wiped off with a little bit of denatured alcohol on a rag.

Once the shellac was dry, I applied a couple of coats of lacquer just for extra protection. Don't worry about avoiding the stainless steel rods here — the lacquer won't be noticeable on them. After screwing on the casters, your cart is ready to go to work in your bathroom. W

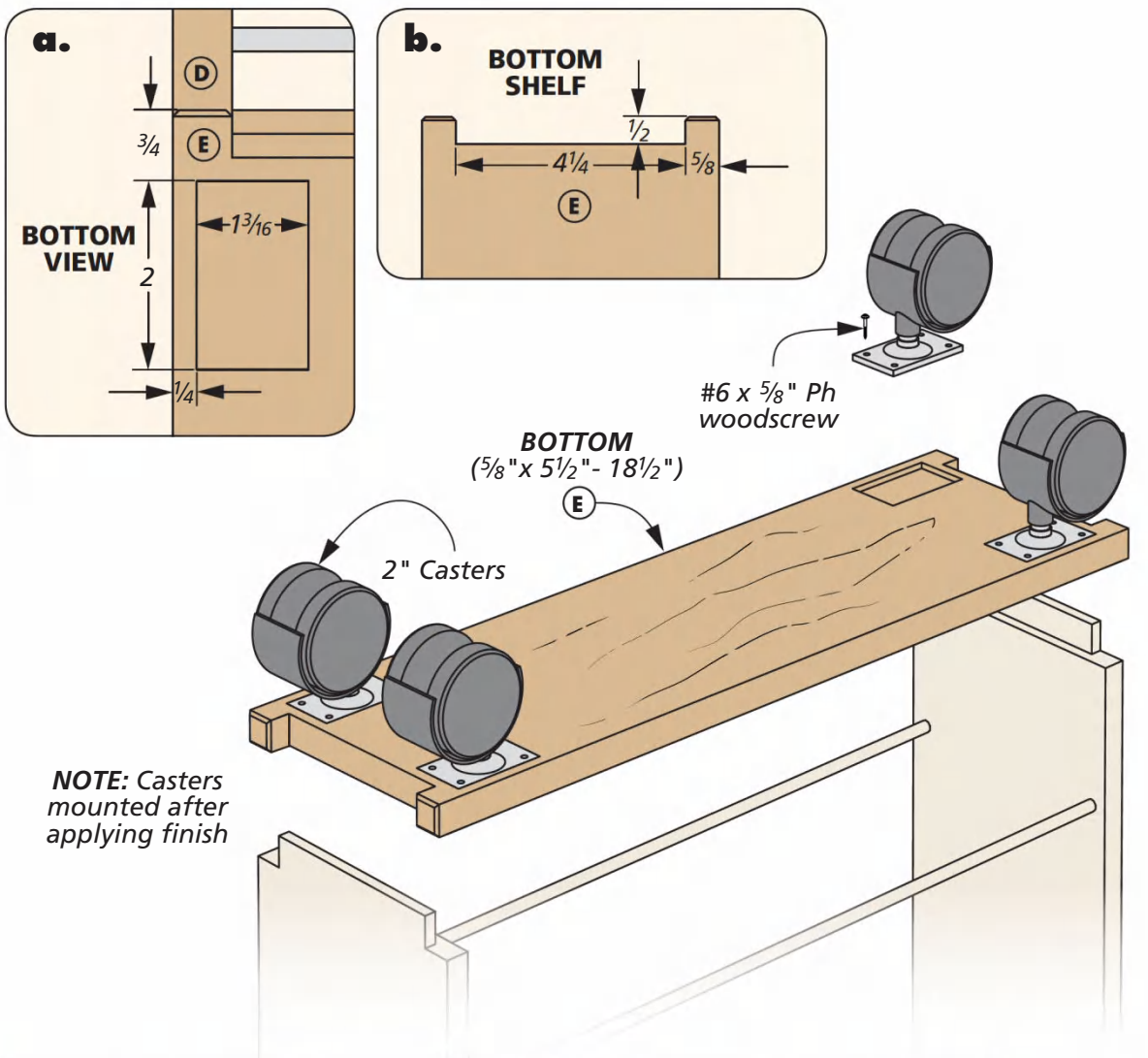

CLEAN UP MORTISES

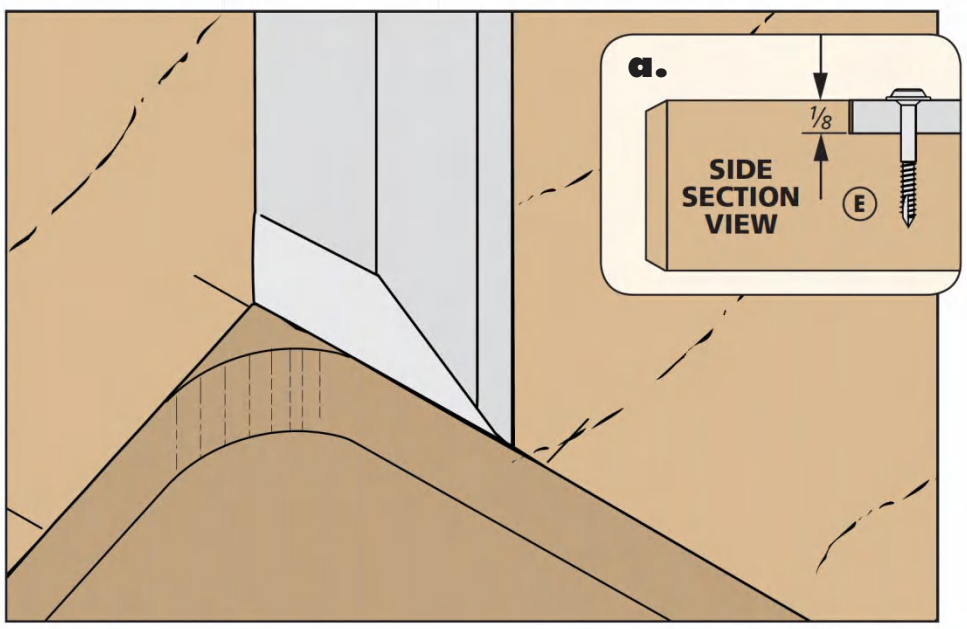

Square the Mortise. After removing the bulk of the waste with a Forstner bit or router, square up the corners of the mortise with a chisel. Then, mount the casters after applying finish.

Materials & Supplies

A	Sides (2)	1/2 x 5 1/2 - 30
B	Shelves (2)	1/2 x 5 1/2 - 18 1/2
C	Core (1)	5/8 x 4 1/4 - 18 1/2
D	Strips (2)	5/8 x 5/8 - 21
E	Bottom (1)	5/8 x 5 1/2 - 18 1/2

- (4) 1/4"-dia. x 36" Stainless Steel Rods
- (4) 3/8"-dia. Plugs
- (16) #6 x 5/8" Ph Woodscrews
- (4) 2"-dia. Casters

Shaker Sewing Cabinet

Simplicity often gets overlooked in these hasty times. That's sad, take a look at what hurried people miss.

The original cabinet that inspired the one you see here came from the Shaker colony that once thrived in Hancock, Massachusetts. The formal description from antique dealers would be "A four-over-two-over-one sisters sewing cabinet." The drawer count is clearly important to today's audiences. The Shakers, though, saw things with a more holistic eye. The relation of their buildings to the land, the rooms to the buildings, and the furniture to the rooms, were all governed by a precise set of intentions — the singular mission of simplicity. This cabinet's clean, clear, and organized geometry echoes all of this.

Gorgeous cherry glows all over this project. With poplar serving as a pragmatic supporting cast for the drawer shells and cabinet back. Birch plywood humbly works as drawer and cabinet bottoms.

If you've been meaning to brush up on your joinery skills, this project will get you flexing in no time at all. It starts with a handful of mortise and tenons to bring the side assemblies together. Those steps are a warm-up for more mortise and tenons you'll tackle in the rails and stretchers. (Throw in dovetail tenons on the top rails for some spice.) Then you'll spend some time making dovetail drawers at the table saw. The project winds down with making a rule joint for the top and drop leaf. A full plate of woodworking indeed.

▲ Cherry and poplar perform together well. The contrast between the drawer sides and the rest of the cabinet make looking at the cabinet as enjoyable as using it. A clear lacquer finish lets all the wood shine.

▲ Rule joints rule. Do you see the brass hinges that holds the drop leaf to the top? No, you don't, and that's the beauty of a rule joint. A rule joint does the double duty of smooth operation and hiding hardware.

▲ The drop leaf support you see here works unseen underneath the top. The support glides easily and effortlessly in the bracket that the holds it to the top of the cabinet. A thumb and index finger is all it takes.

Written and Illustrated by: Erich Lage

Project Design: Chris Fitch

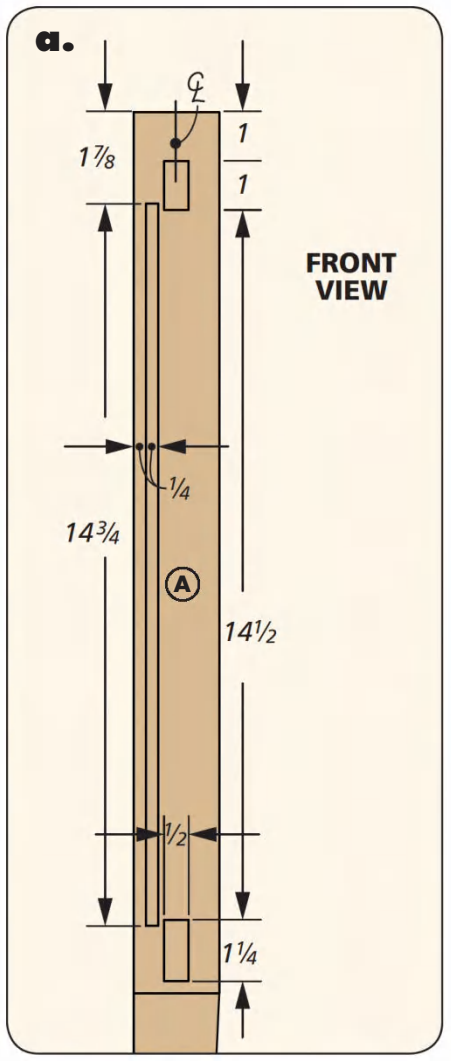

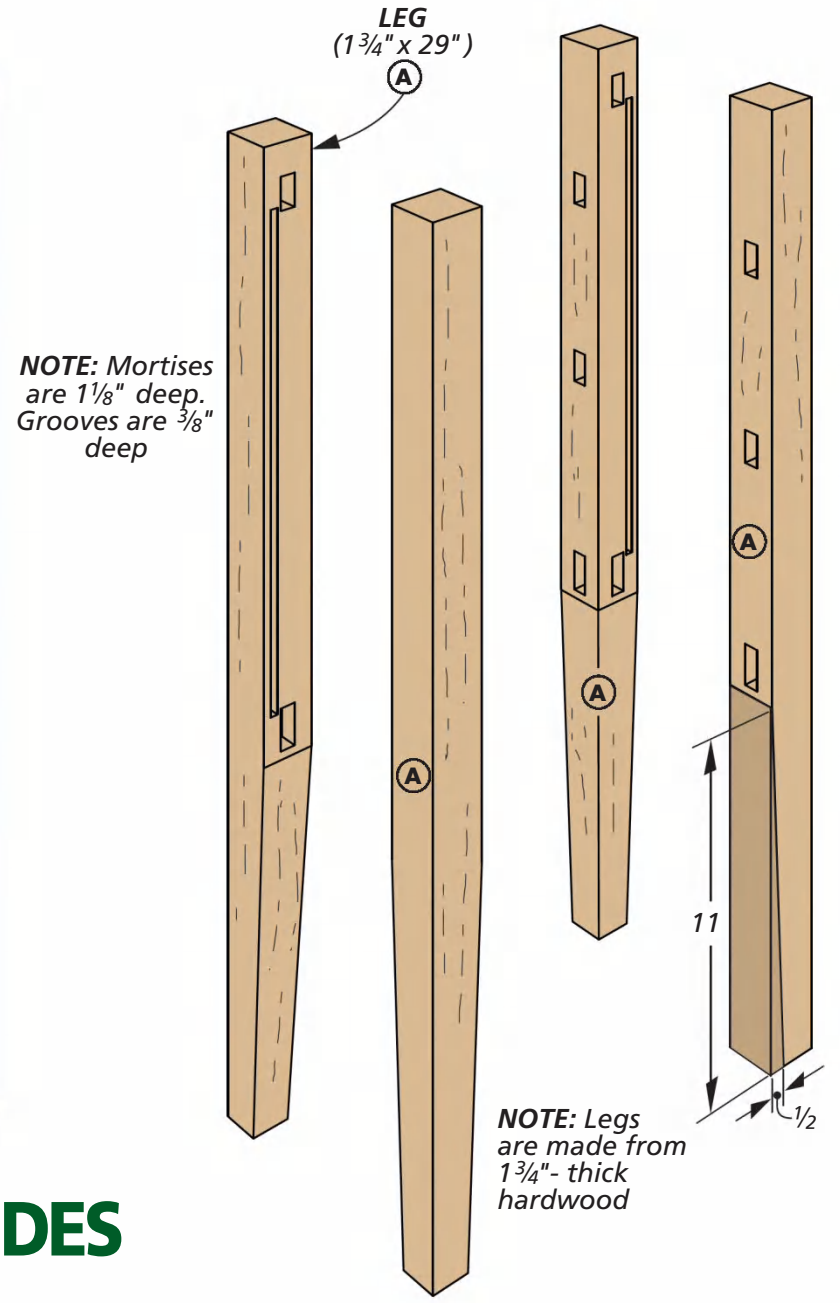

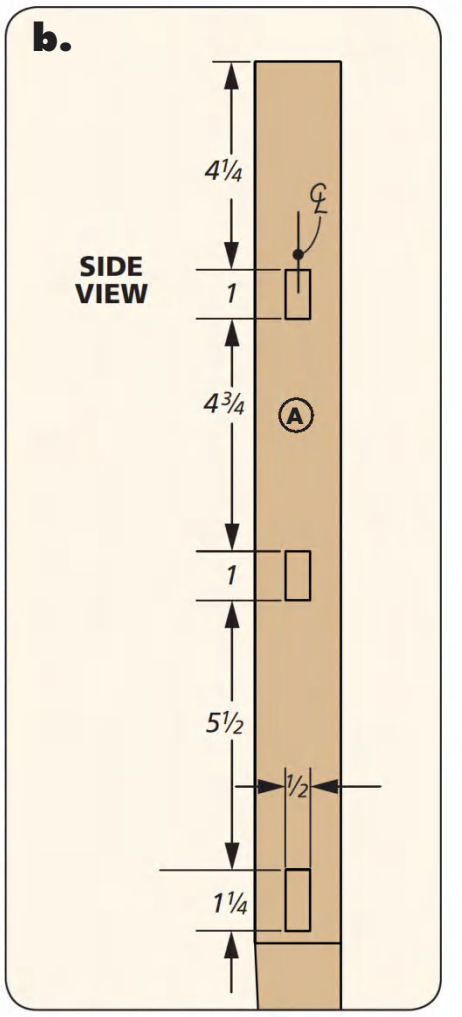

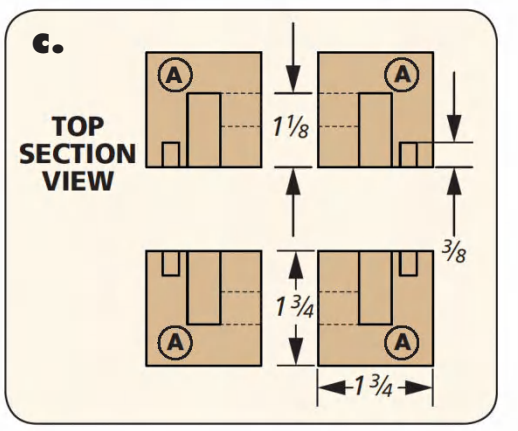

Start with the **SIDES**

The four legs you see above are made from 8/4 hardwood. They are tied together front to back with equally thick rails. As you see, the legs and the rails have grooves that hold rabbeted hardwood panels securely in place. Legs are the foundation and often the cornerstone of cabinet projects. So getting the details right on the legs will go a long way towards smooth sailing for the rest of the project.

LEG GEOGRAPHY. The front and back legs are mirror images of each other. Detail 'a' shows the faces that hold the side panels and rails. They have two mortises for the rails and a long groove for the side panels.

The faces that join with the front and back rails have three mortises (detail 'b') to accommodate them. Eventually, there will be dovetail sockets at the top of each leg to join with the top rails. Creating those notches happens a little later in the process. For now, we'll work on the grooves and mortises that will hold the rails and panels.

GROOVE & MORTISES FIRST. Start by cutting all the parts to length. It's a good practice to mark the top of the legs to keep them properly oriented. Detail 'c' shows this, along with a look at the mortise and groove locations.

PLUNGE ROUTING

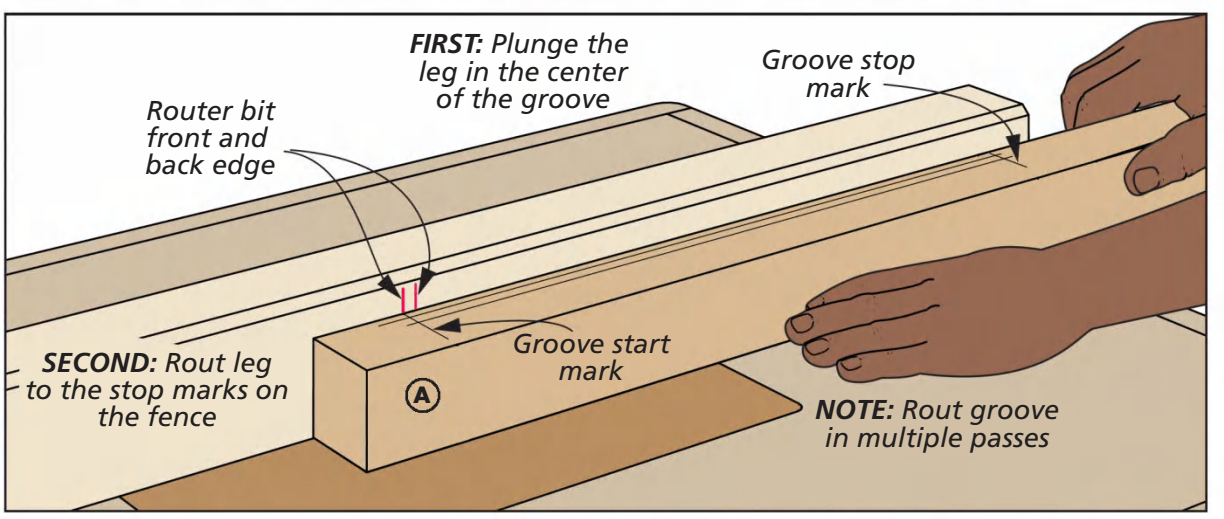

Making a Stopped Groove. It's easy to make a stopped groove in the legs. Install a straight bit in your router table, then mark the front and back edges on the fence. Once you've plunged the leg onto the bit, the marks will show you where to stop.

I routed the grooves at the router table. You don't want the grooves to show at the bottom of the legs. And you don't want to weaken the wall of the mortise for the upper rail. So you'll have to make a plunge and stop the groove at both ends. The box at the bottom of the previous page shows you how to do this. Then you'll need to square up the ends of the grooves. All of the mortises on both faces are done at the drill press, then squared up as well.

TAPER THE LEGS. The main drawing on the previous page shows the subtle tapers that are on the inside faces of the legs. Over at the table saw, a simple sled with cleats supporting the leg will make the tapers uniform on the legs. Follow this up with your plane or sandpaper to smooth the surface. Now you're ready to tackle the rails and panels.

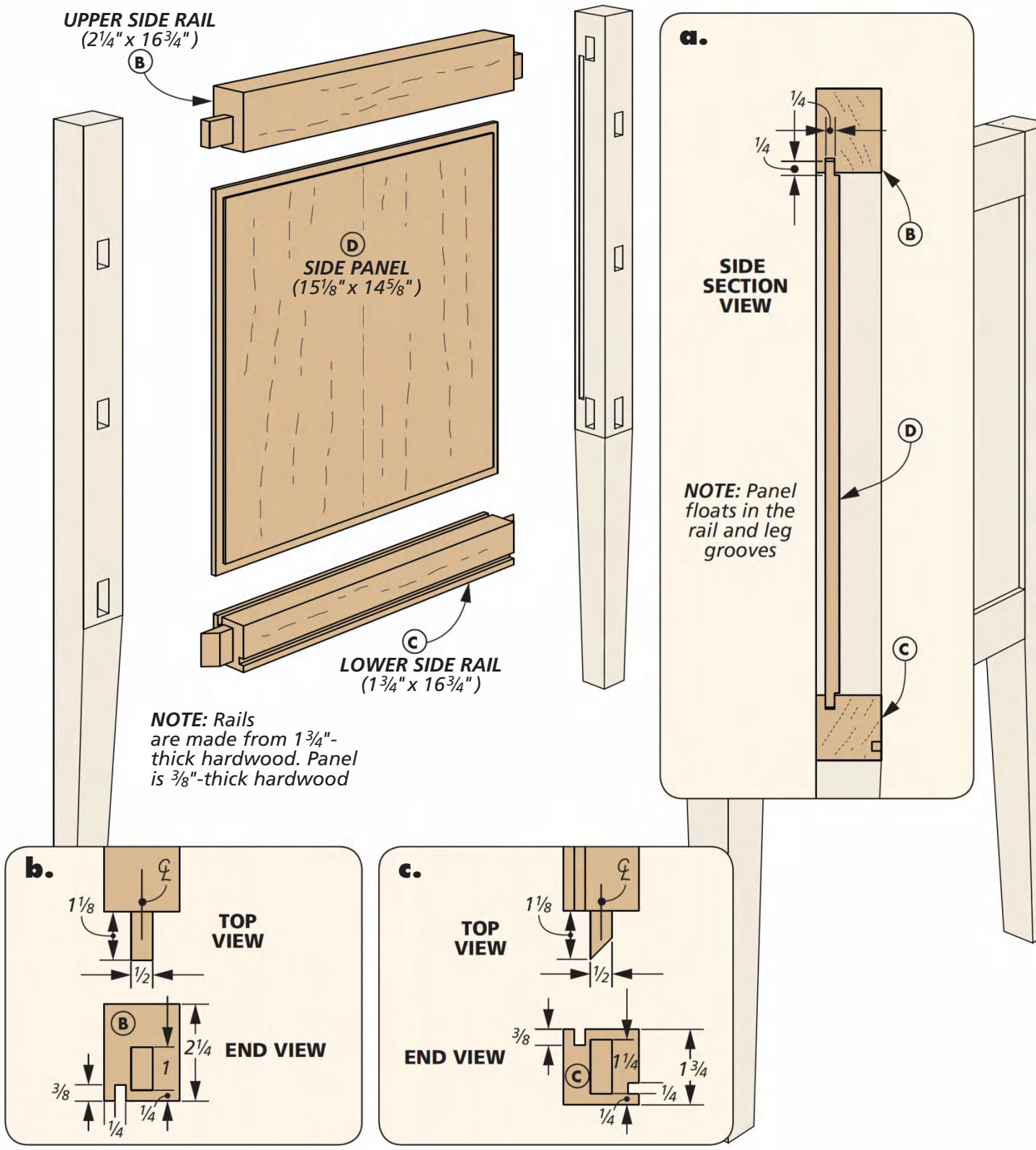

RAILS & PANELS

As you see in the drawing to the right, the rails that hold the panel in place, and bring the legs together, are thick, no-nonsense rails. The tenons in the upper rails are square and easy enough to do at the table saw.

The tenons on the lower rails start out the same, but notice in detail 'c' that they're mitered. Since they're adjacent to the tenons on the front and back lower rails this compromise allows the rails to fully seat in the mortise .

I cut the overall shape of the tenon in the same manner as I did on the upper rail. But, to make the miter, I clamped the rail in my vise at the workbench and trimmed the end with a hand saw.

When making cuts like this, I'll switch up the choice of saws to use for the task. I've got a cabinet on the wall of my shop that houses a generous complement of hand saws. I chose my trusty *Dozuki* saw for this job. It's a well-known member of the family of Japanese hand saws that are available. And it's the most similar to a western backsaw.

There's one thing left to do on the rails — the grooves for the side panels. You can rout those over at the router table. Then turn your attention to the panels.

PANELS ARE NEXT. The main drawing above reveals that the panels are glued up from two ⅜"-thick cherry pieces. I planed ½" material to thickness for the panels.

I used cauls and light clamping pressure to help keep the panels flat during the glueup.

But if they do have a curve to them when the clamps are removed, not to worry. After you cut the rabbets in the edges, and move on to assembling the sides, the grooves in the legs and rails will flatten the panel.

GLUE UP THE SIDES. Gluing up the sides calls into play the standard operating procedures. Check for any squeeze-out and clean it up with a warm, wet rag.

With that, you can set the cabinet sides out of the way and focus on making more rails, stretchers, and drawer guides. The mortise and tenons you've done here are a great warm-up for what's on the next few pages.

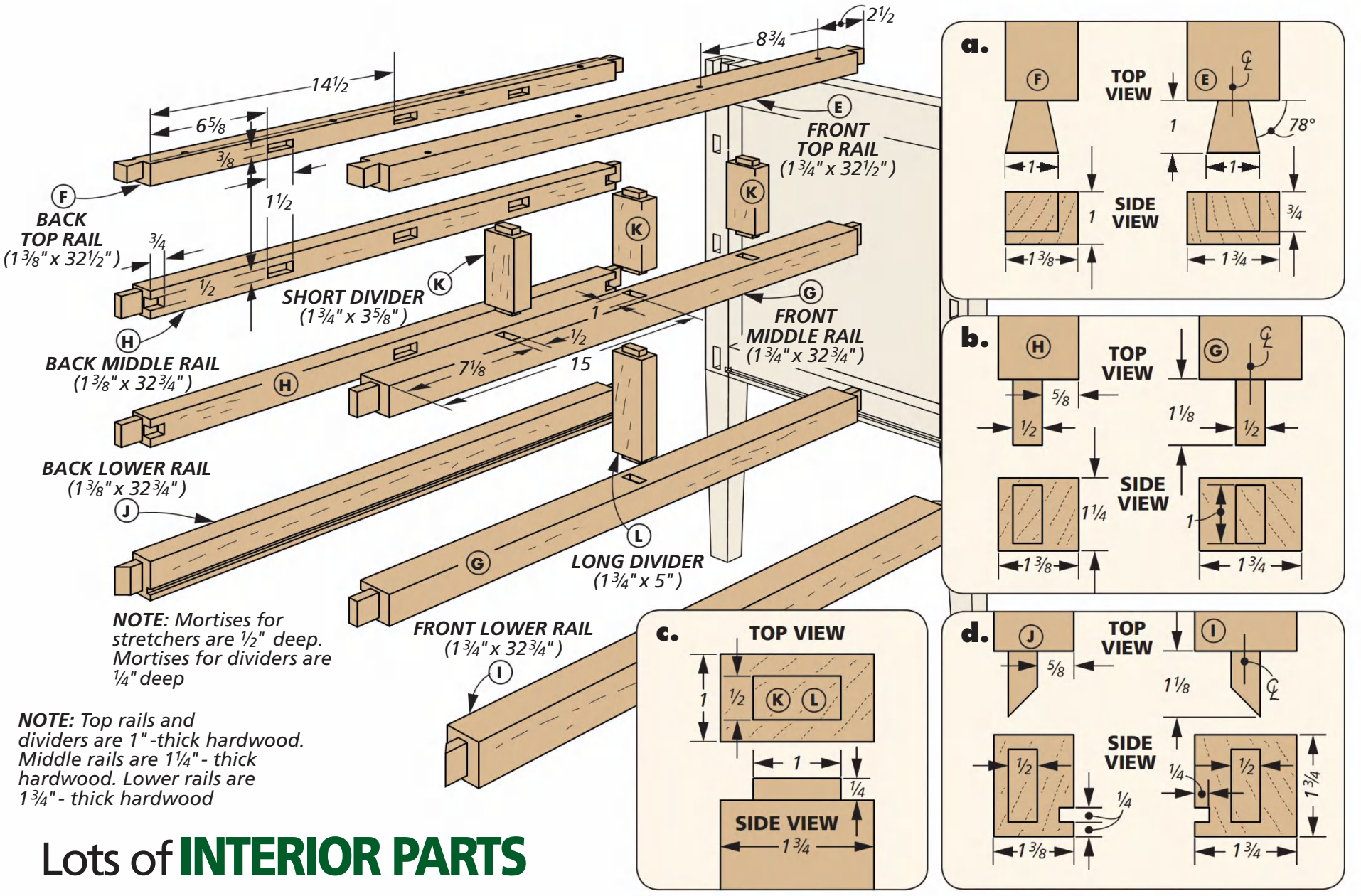

Lots of INTERIOR PARTS

Lots of internal parts haunt the inside of the sewing cabinet — two top rails, four middle rails, two bottom rails, four drawer dividers, eleven stretchers, and fourteen drawer guides. If you lined up all these parts end to end you would realize that — you're avoiding the task at hand, and should probably focus on making some mortises and tenons. I suggest you start with the rails you see in the drawing and details above.

TENON DETAILS. Start off by sizing all the parts. Note that the top rails are ¼" shorter than the rest. From shoulder to shoulder, all the rails are the same length. Detail 'a' above shows that the dovetail tenons are not as long as the other tenons.

You can cut them to size and shape the dovetail on the end however you see fit. I did mine at the band saw followed by a little sanding by hand.

The tenons on the four middle rails (detail 'b') are all the same size. Lastly, the two bottom rails have mitered tenons like the ones you did for the sides.

DOVETAIL SOCKETS. When the tenons are completed on all of the rails, you'll need to do a dry assembly with the sides you glued up earlier. This dry assembly is needed to perfectly locate the dovetail sockets in the tops of the legs.

Bring together the sides with the bottom and middle rails in place. Now, lay the rails on top and trace the dovetail profile onto the leg. The box to the left shows what this looks like. Then you can waste away the material for the dovetail. Also, drill the holes and counterbores for attaching the cabinet top.

MORTISES ON THE RAILS. So many mortises. The inside faces of the rails have mortises to hold the stretchers. I laid these out with the front and back rails clamped together to ensure they lined up.

You also have some mortises in the front upper and middle

DOVETAIL SOCKETS

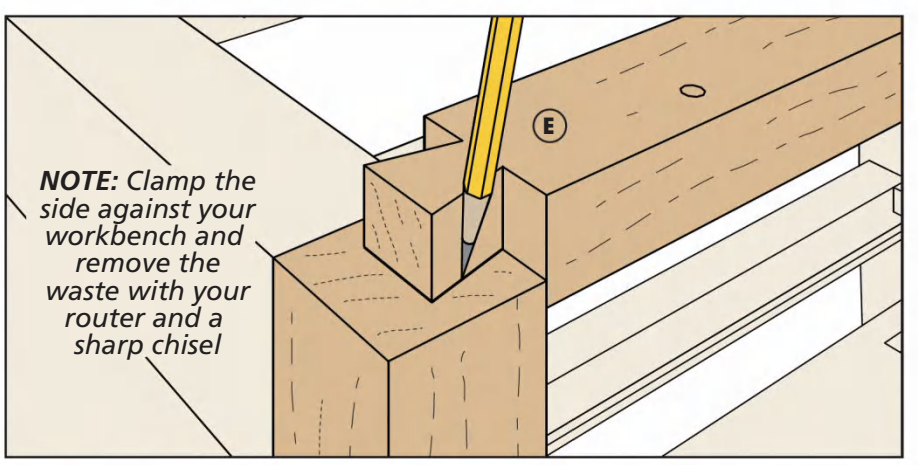

Dry Assembly First. With the middle and lower rails fit to the sides, set the upper rail on top of the legs. Then trace the profile of the dovetail onto the top of the legs.

rails for drawer dividers. You better get drilling and chopping. To complete the rails, rout the groove in the bottom rails for the plywood bottom.

DIVIDERS. Next up is making the dividers. There are three dividers for the small drawers, and one longer one between the middle drawers.

This calls for spending time at the table saw crafting the tenons and fitting them to their mortises as you go (detail 'c' on the previous page). This exercise warms you up for your next task — making the stretchers.

STRETCHERS. First, make the four side stretchers that have tenons offset to the inside of the cabinet (detail 'a'). Following those parts are four lower stretchers with centered tenons (detail 'b'). These two groups of stretchers are the same thickness. The remaining upper stretchers are thinner than their counterparts (detail 'c').

DRAWER GUIDES. There are two sizes of drawer guides. The guides ride piggy-back on the stretchers and are glued in place after assembly. The main drawing above shows where they go. The last part you need to make before assembly is the plywood bottom. Then you can gear up to assemble the case.

ASSEMBLE THE CASE. There are 26 parts involved in the glueup for the case. So, unless you have a brainy pet octopus that loves puzzles — you're going to need help. Also, the helper needs to be willing to do a rehearsal glueup where everything is staged and within reach.

Doing a dry run shows the weak spots in the plan and gives you an opportunity to iron things out. If you have your clamps pre-gapped, a bucket with warm water and rags close at hand, the glueup will be a breeze.

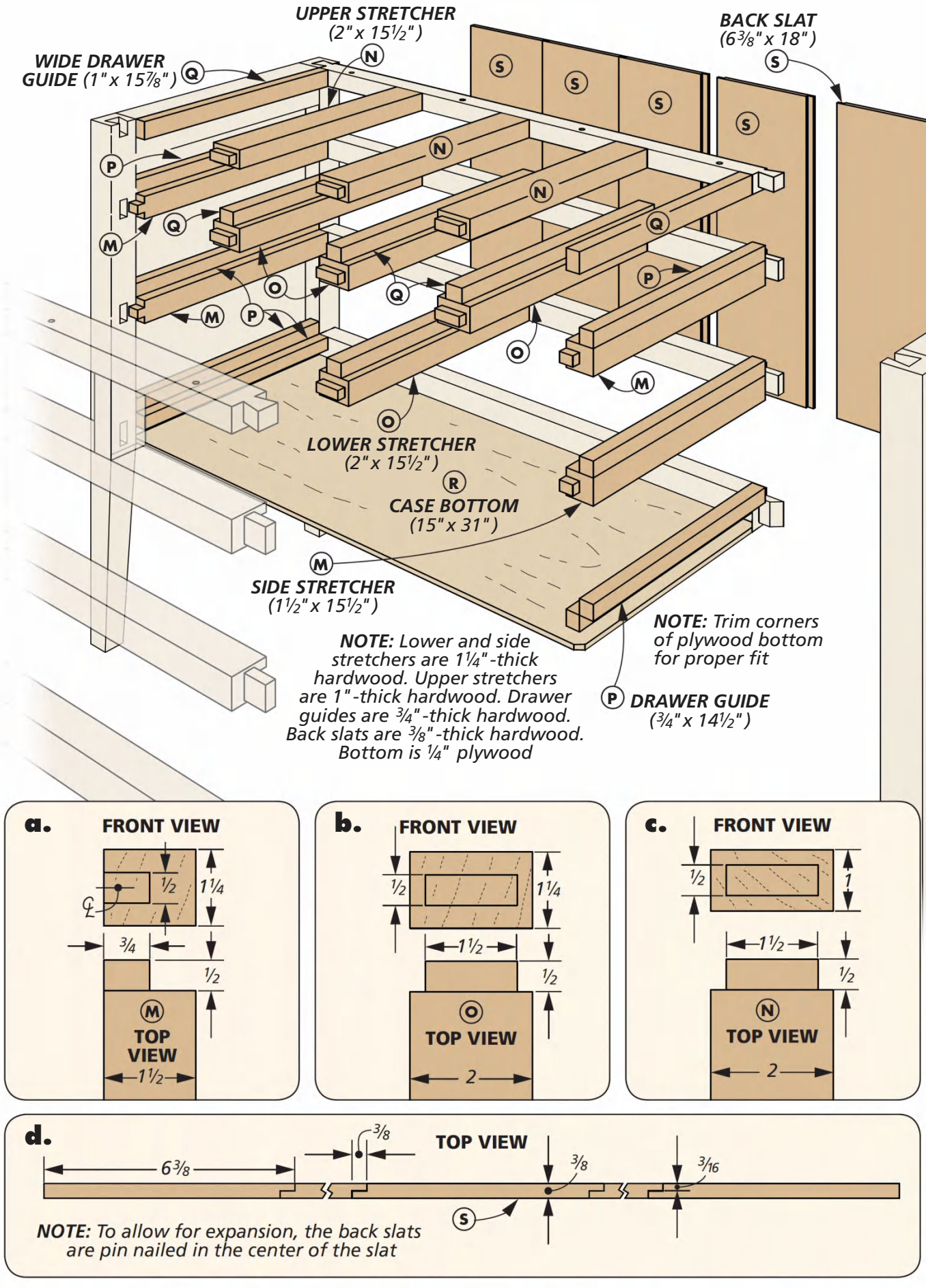

DRAWER GUIDES, PART 2. When the debris from the glueup is packed away, you can prepare the finishing touch to the interior of the cabinet — the drawer guides. Notice that the square guides sit on the outer stretchers to guide the bottom and middle drawers. The remaining guides are a little wider and are attached to the inner stretchers and side rails. With the guides in place, you need to make the back for the cabinet.

THE BACK. The back is a classic example of Shaker pragmatism. Just five poplar boards are inset to the frame of the cabinet. As you see in detail 'd,' the boards are joined with half-laps. Like the side panels earlier, I planed these boards to thickness from ½" stock. Then made the rabbeted edges at the table saw.

Pin nailing the back in place completed this stage of building. Now you can move on to making the drawers and the top.

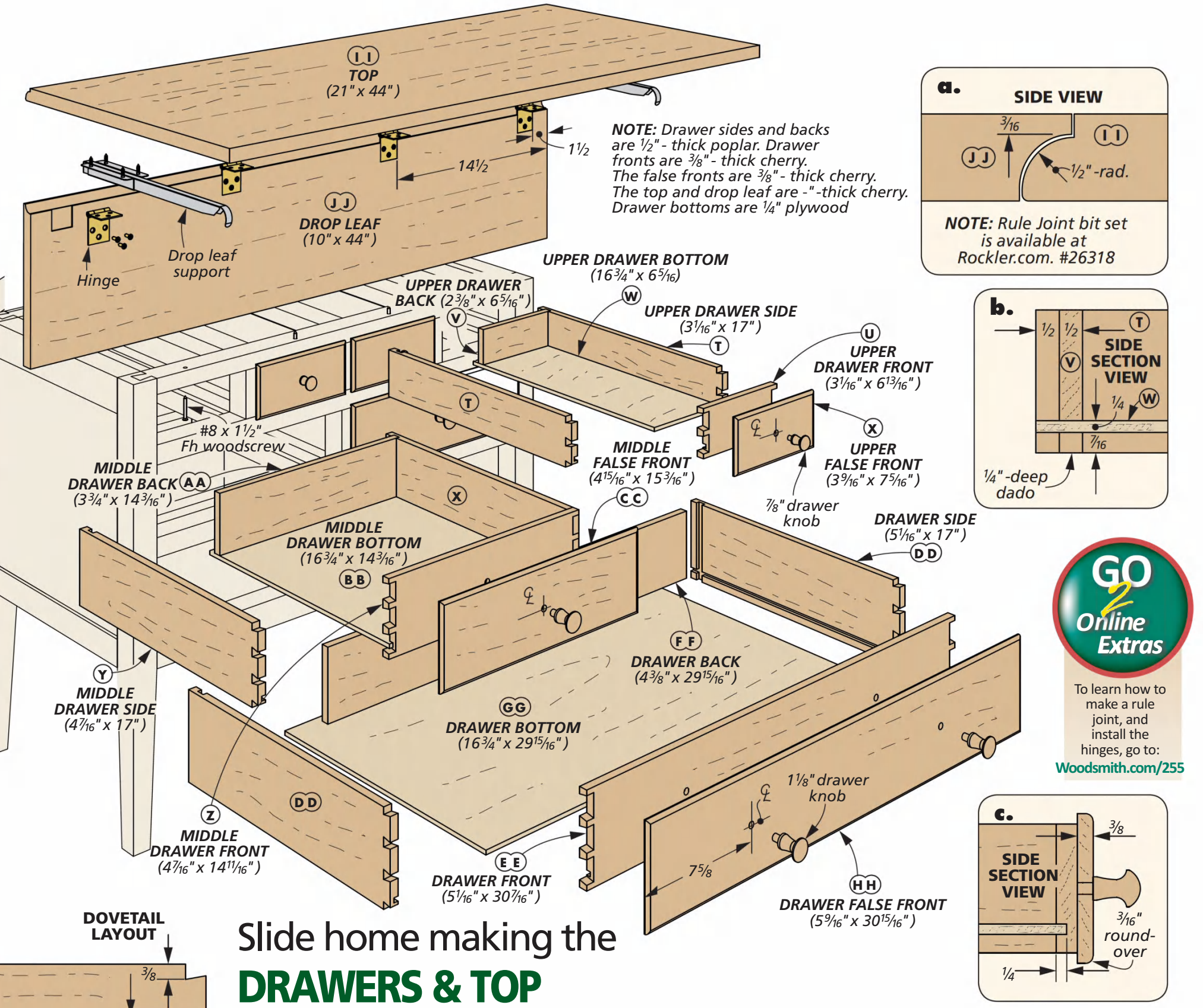

GO 2 Online Extras

To learn how to make a rule joint, and install the hinges, go to: Woodsmith.com/255

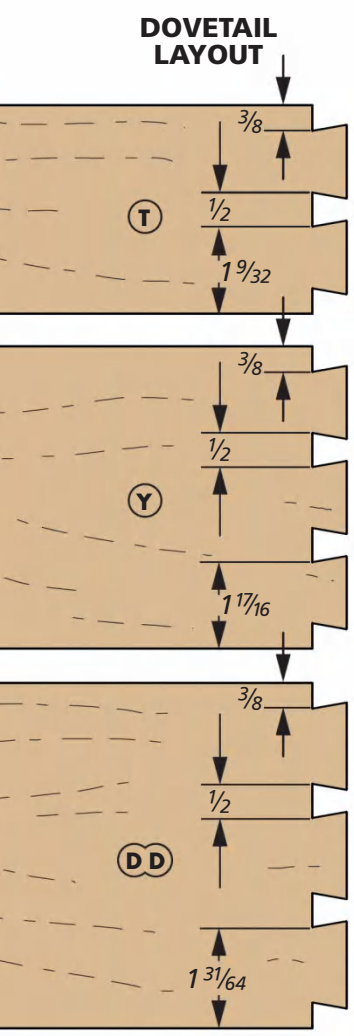

Slide home making the DRAWERS & TOP

There are plenty of storage options with the drawers that are housed in this cabinet. Four drawers across the top of the cabinet allow for all the small things that are called for when sewing. The middle and bottom drawers below provide generous storage space. The interiors are made of poplar, a secondary wood that was called into duty for cabinets like this. The joinery of choice is the classic dovetail joint for long life. A cherry false front (and drawer front) brings the look of the drawers back into the fold of the cabinet.

DOVETAILS FIRST. After sizing all the parts, you could, as the Shakers most likely did, cut the dovetailed drawers by hand. But the article on page 60 shows you how to cut them at the table saw with a blade that's designed for the task.

GROOVES NEXT. When you've finished the dovetail work, change out the blades and cut the groove for the plywood bottoms. After assembly, you can make the false fronts (detail 'c').

FALSE FRONTS. The cherry false fronts are straightforward. To act as a stop for the drawers, they are ½" longer and wider than the drawer itself. Next, add the roundover on all the edges and drill the hole needed for the knobs. Attaching the false fronts to the drawers was just a matter of applying glue to the back and clamping them centered on the drawer.

THE TOP

The top is a glued-up hardwood panel that attaches to the cabinet through the rails. Notice in the drawings above that the drop leaf is on the back of the cabinet. This allows you expand the worksurface yet maintain easy access to all the tools and materials you need for your sartorial journey. The leaf is attached to the top with four hinges that are hidden in a rule joint.

RULE JOINT. Using a rule joint between the top and the drop leaf ensures that the two pieces will align perfectly and operate smoothly for the life of the table. A rule joint consists of two profiles that you'll create with a matching set of router bits (detail 'a' on previous page). At *Woodsmith.com/255* you'll find directions for making the rule joint and installing the hinges.

When the rule joint is done, and the mortises for the hinges are completed (detail 'a') screw the hinges in place you're ready to install the top. The top is centered on the cabinet side to side and overhangs the front by 2". Screws through oversized holes in the front and back rails hold the top in place. Lastly, screw the leaf supports to the underside of the top. The photo on the first page shows that they're snug to the sides and flush with the back of the cabinet.

FINISH. Cherry mellows with age in a way that no stain can match. So just two coats of lacquer — it would be a crime not to let that cherry shine. W

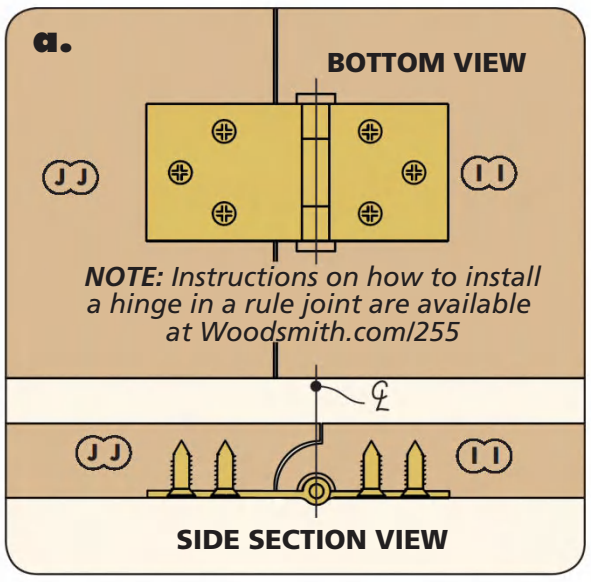

Materials, Supplies & Cutting Diagram

A	Legs (4)	1¾ x 1¾ - 29
B	Upper Side Rails (2)	1¾ x 2¼ - 16¾
C	Lower Side Rails (2)	1¾ x 1¾ - 16¾
D	Side Panels (2)	⅜ x 15⅛ - 14⅝
E	Front Top Rail (1)	1 x 1¾ - 32½
F	Back Top Rail (1)	1 x 1⅜ - 32½
G	Front Middle Rails (2)	1¼ x 1¾ - 32¾
H	Back Middle Rails (2)	1¼ x 1⅜ - 32¾
I	Front Lower Rail (1)	1¾ x 1¾ - 32¾
J	Back Lower Rail (1)	1¾ x 1⅜ - 32¾
K	Short Dividers (3)	1 x 1¾ - 3⅝
L	Long Divider (1)	1 x 1¾ - 5
M	Side Stretchers (4)	1¼ x 1½ - 15½
N	Upper Stretchers (3)	1 x 2 - 15½
O	Lower Stretchers (4)	1¼ x 2 - 15½
P	Drawer Guides (8)	¾ x ¾ - 14½
Q	Wide Drawer Guides (6)	¾ x 1 - 15⅞
R	Case Bottom (1)	¼ ply. - 15 x 31
S	Back Slats (5)	⅜ x 6⅜ - 18
T	Upr. Drawer Sides (8)	½ x 3 1/16 - 17
U	Upr. Drawer Fronts (4)	½ x 3 1/16 - 6 13/16
V	Upr. Drawer Backs (4)	½ x 2⅜ - 6 5/16
W	Upr. Drwr Btms. (4)	¼ ply.-16¾ x 6 5/16
X	Upr. False Fronts (4)	⅜ x 3 9/16 - 7 5/16
Y	Mid. Drawer Sides (4)	½ x 4 7/16 - 17
Z	Mid. Drawer Fronts (2)	½ x 4 7/16 - 14 11/16
AA	Mid. Drawer Backs (2)	½ x 3¾ - 14 3/16
BB	Mid. Drwr Btms. (2)	¼ ply. - 16¾ x 14 3/16
CC	Mid. False Front (2)	⅜ x 4 15/16 - 15 3/16
DD	Drawer Sides (2)	½ x 5 1/16 - 17
EE	Drawer Front (1)	½ x 5 1/16 - 30 7/16
FF	Drawer Back (1)	½ x 4⅜ - 29 15/16
GG	Drawer Bottom (1)	¼ ply. -16¾ x 29 15/16
HH	Drawer False Front (1)	⅜ x 5 9/16 - 30 15/16
II	Top (1)	13/16 x 21 - 44
JJ	Drop Leaf (1)	13/16 x 10 - 44

- (4) 1⅛" -dia. Drawer Knobs
- (4) ⅞" -dia. Drawer Knobs
- (8) #8 x 1½" Fh Woodscrews
- (4) Hinges w/screws
- (1 pr.) Leaf Supports

½" x 7½" - 60" Cherry (3.1 Sq. Ft.)

1¼" x 4" - 36" Cherry (Two Boards @ 1.5 Bd. Ft. Each)

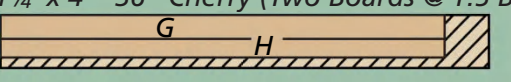

1" x 7½" - 72" Cherry (Two Boards @ 4.7 Bd. Ft. Each)

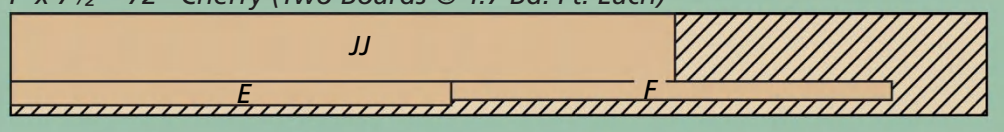

1¼" x 4" - 36" Poplar (Two Boards @ 1.5 Bd. Ft. Each)

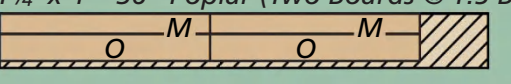

½" x 8½" - 78" Cherry (Two Boards @ 4.6 Bd. Ft. Each)

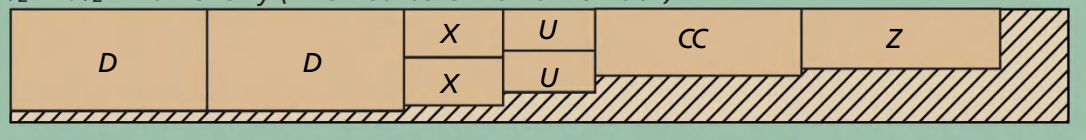

ALSO NEEDED: *One 48" x 48" Sheet of ¼" Birch Plywood*

½" x 10" - 84" Poplar (Two Boards @ 5.8 Sq. Ft. Each)

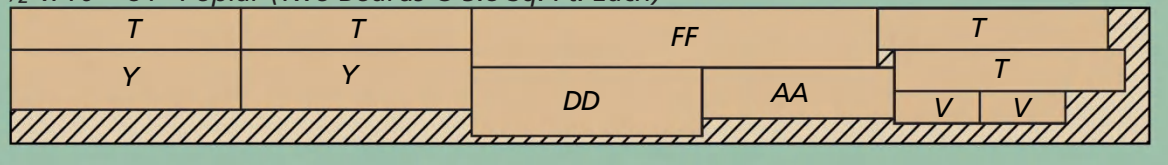

SOURCES:
Horton-brasses.com
Large Cherry Knob....WK-7
Small Cherry Knob....WK-5

Rockler.com
Brass Plated Hinge...29256
Drop Leaf Support...30006

1¾" x 8" - 48" Cherry (Two Boards @ 5.3 Bd. Ft. Each)

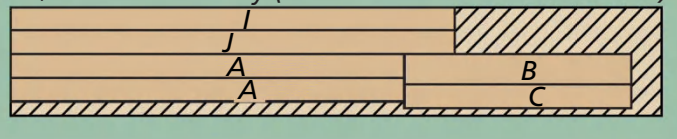

1" x 5½" - 36" Poplar (Two boards @ 1.7 Bd. Ft. each)

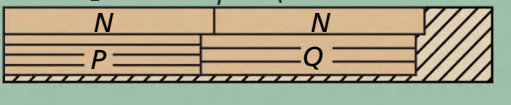

1" x 7½" - 60" Cherry (Three Boards @ 3.9 Bd. Ft. Each)

½" x 6½" - 60" Poplar (Two boards @2.7 Sq. Ft. each)

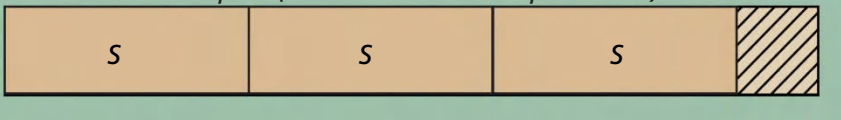

DESIGNER Project

Ageless Armoire

This whimsical wardrobe's youthful vibe is just a front. Underneath the young, perennially optimistic look is a cabinet that mellows with age.

This armoire challenges woodworking rules on several fronts. Like using hardwood on the inside, and plywood on the outside. To me, it hearkens back to the years of dealing with eye-rolling fits, and chilly shoulders from teenagers who want to do things their own way.

But as you see here, what at first might seem naive or over the top actually works quite well. Who would have thought that painted edges of Baltic birch plywood that are then chamfered would look so good? And the cherry veneer fronts calm the look and provide balance to the whole. On occasion, youth isn't wasted on the young.

▲ A cherry drawer and base add a calmer note to this cheery piece. The full-extension drawer slides mean you can store lots of stuff easier.

Written by: Erich Lage; Project Design: Dillon Baker

Making a strong **CASE**

The case for the armoire starts out as a simple box with butt joints held together with screws. The drawing to the right shows that, and more details as well.

To get the ball rolling, cut the sides, top, and back to their final size. But you've got the edges of the case to work on before you start assembling parts.

As you see in the drawing, all the exposed edges of the case are painted. To create this unique look means employing a different strategy from the outset. This starts by painting the edges of the case parts. There's no need to tape off the edges. The box below shows the trick I used to make the edges crisp and sharp.

DRILL & PREDRILL. This is the perfect time to layout and drill the holes in the sides for the adjustable shelf sleeves. The elevation drawings to the far right show the spacing needed for each side. Then drill the pilot holes and countersinks in the top and bottom as well (detail 'a').

The back is MDF with a beadboard pattern. When cutting the back, be sure to center it, then glue and nail it in place.

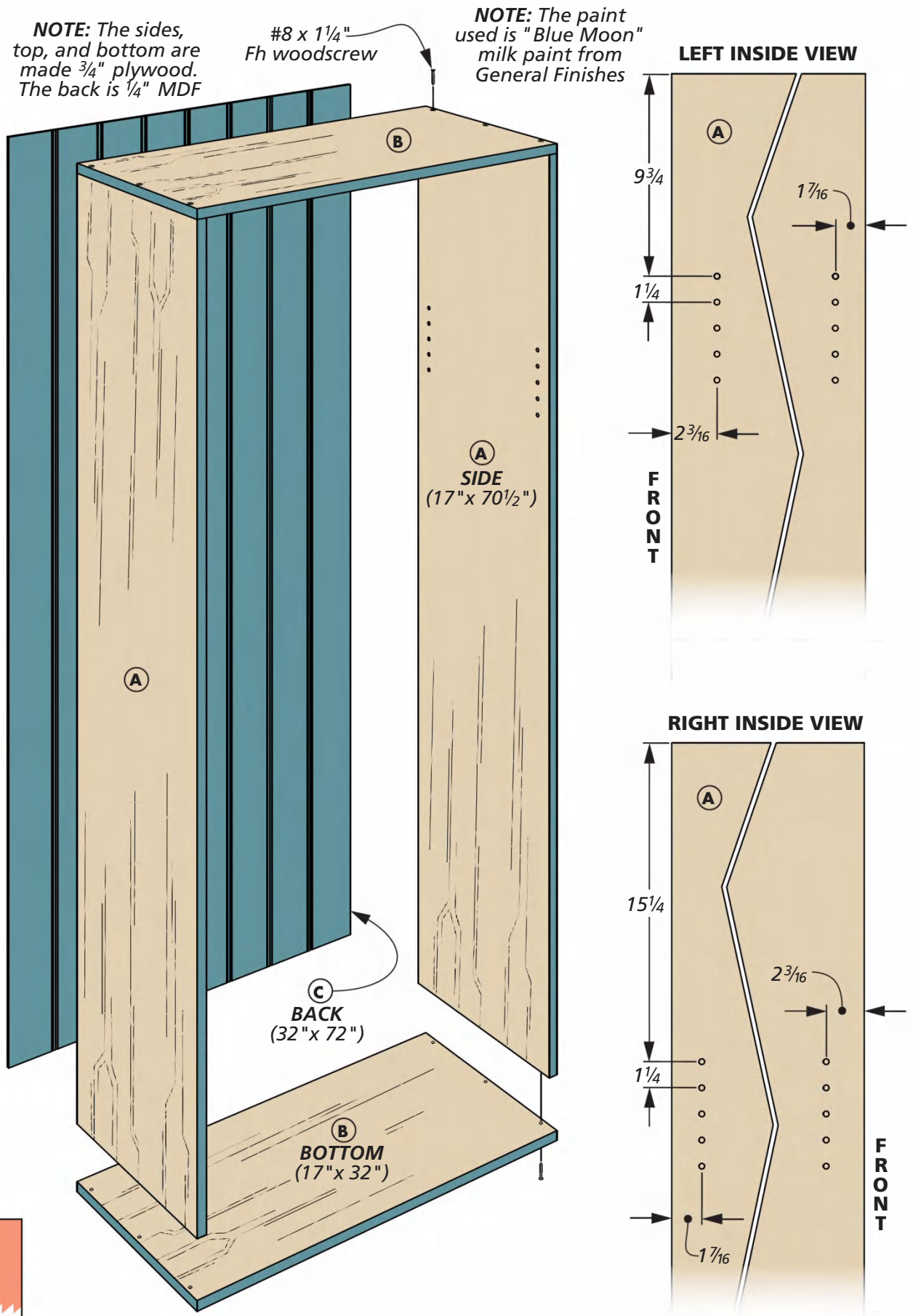

DETAILING THE EDGE

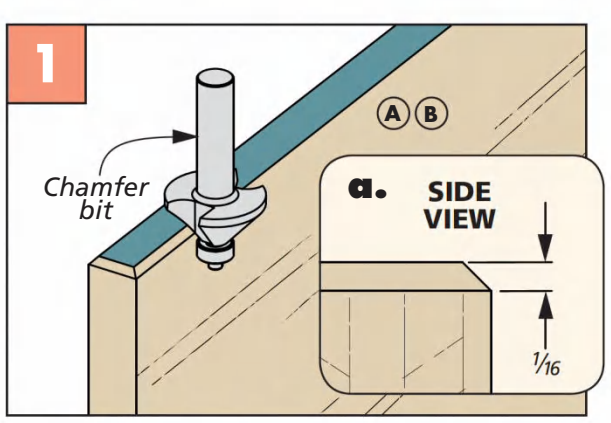

Use a Chamfer Bit. A chamfer bit in your router will give the edges of the armoire a razor-sharp finish.

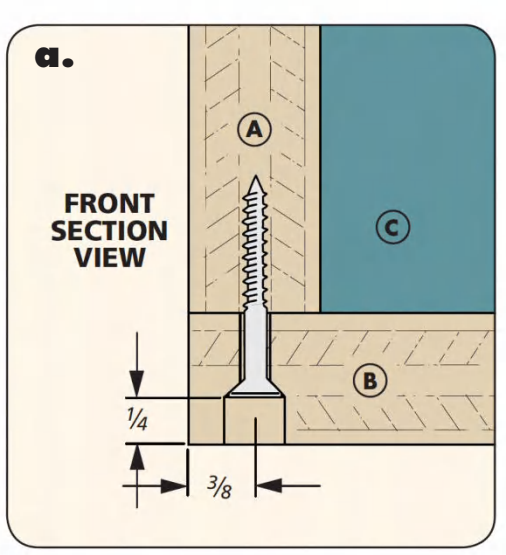

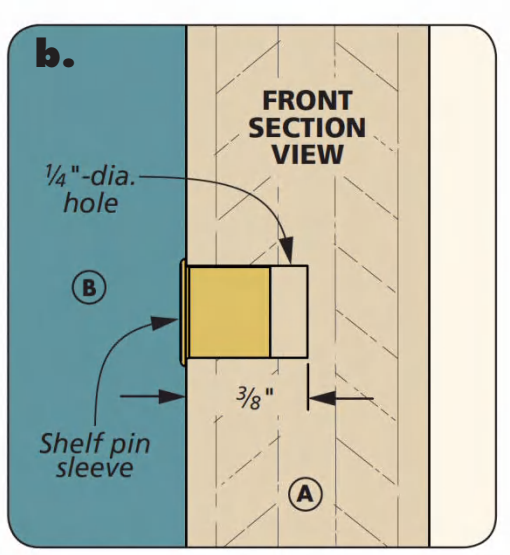

Illustrations: Dirk Ver Steeg

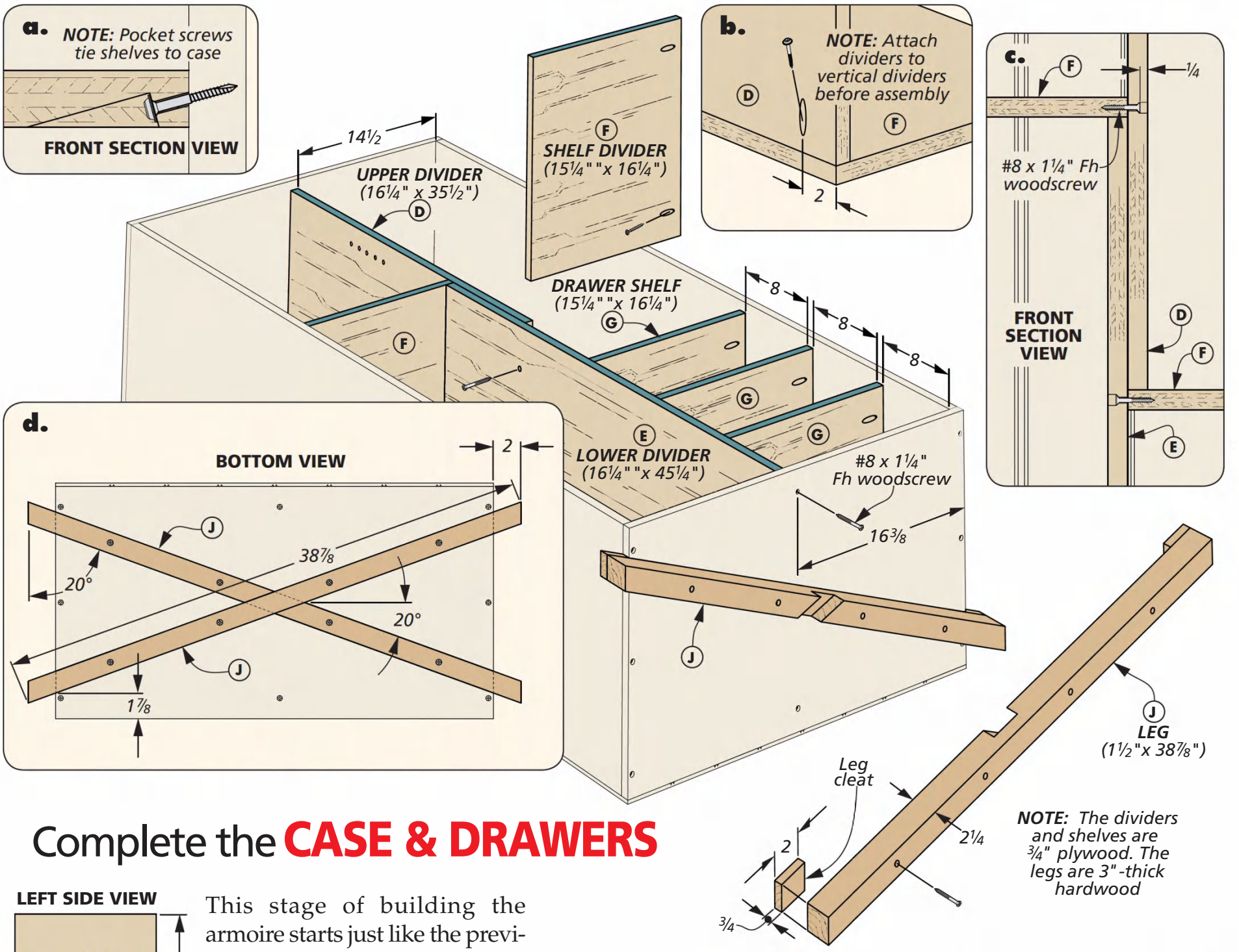

NOTE: The dividers and shelves are 3/4" plywood. The legs are 3"-thick hardwood

Complete the CASE & DRAWERS

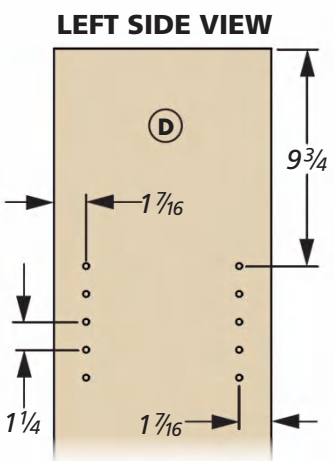

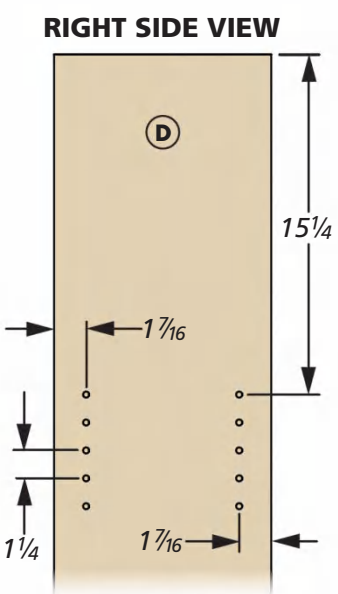

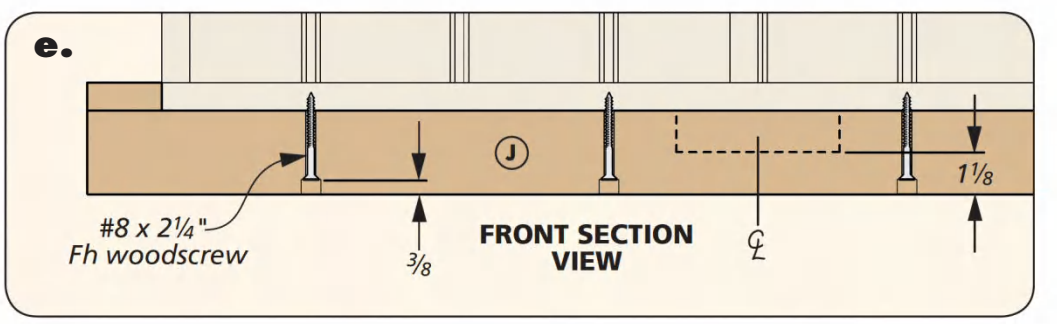

This stage of building the armoire starts just like the previous — cutting all the plywood parts to final size then painting and routing the exposed edges. After the router is cleaned and put away you can lay out the shelf and divider locations with the information provided in the main drawing above.

Note that the dividers, shelves, and drawer shelves are recessed inside the case. This distance accounts for the thickness of the doors that you'll install later. The doors will be set flush to the edges of the case. A combination of screws and pocket screws brings all the parts together.

Set up and drill all the pockets in the underside of the shelves and drawer shelves. You can attach the shelves to the dividers like you see in detail 'b.' Then screw the dividers to the case. Follow this with screwing the dividers to each other, as you see in detail 'c.' This will add rigidity to the case. Finish up this stage by screwing the drawer shelves in place with pocket screws.

THE LEGS. The base is simply two thick cherry boards that support and lift the case off the floor. As you see in the main drawing and detail 'd' above, the parts cross in the middle with a half lap joint, and then extend beyond the sides of the case.

There's an easy way and a hard way to make this base. I chose the easy way, like I'm sure you did. Let me walk you through my steps. Start by making the leg blanks extra long.

You could spend a lot of time at the table saw trying to create large notches in the tops of the legs. Let's not do that. Instead, rip the cleat layer from the legs. Save those pieces though, later you'll use the outer sections to make the cleats of the leg.

HALF LAPS. Take the two leg blanks over to the workbench. There, rout the half laps with a

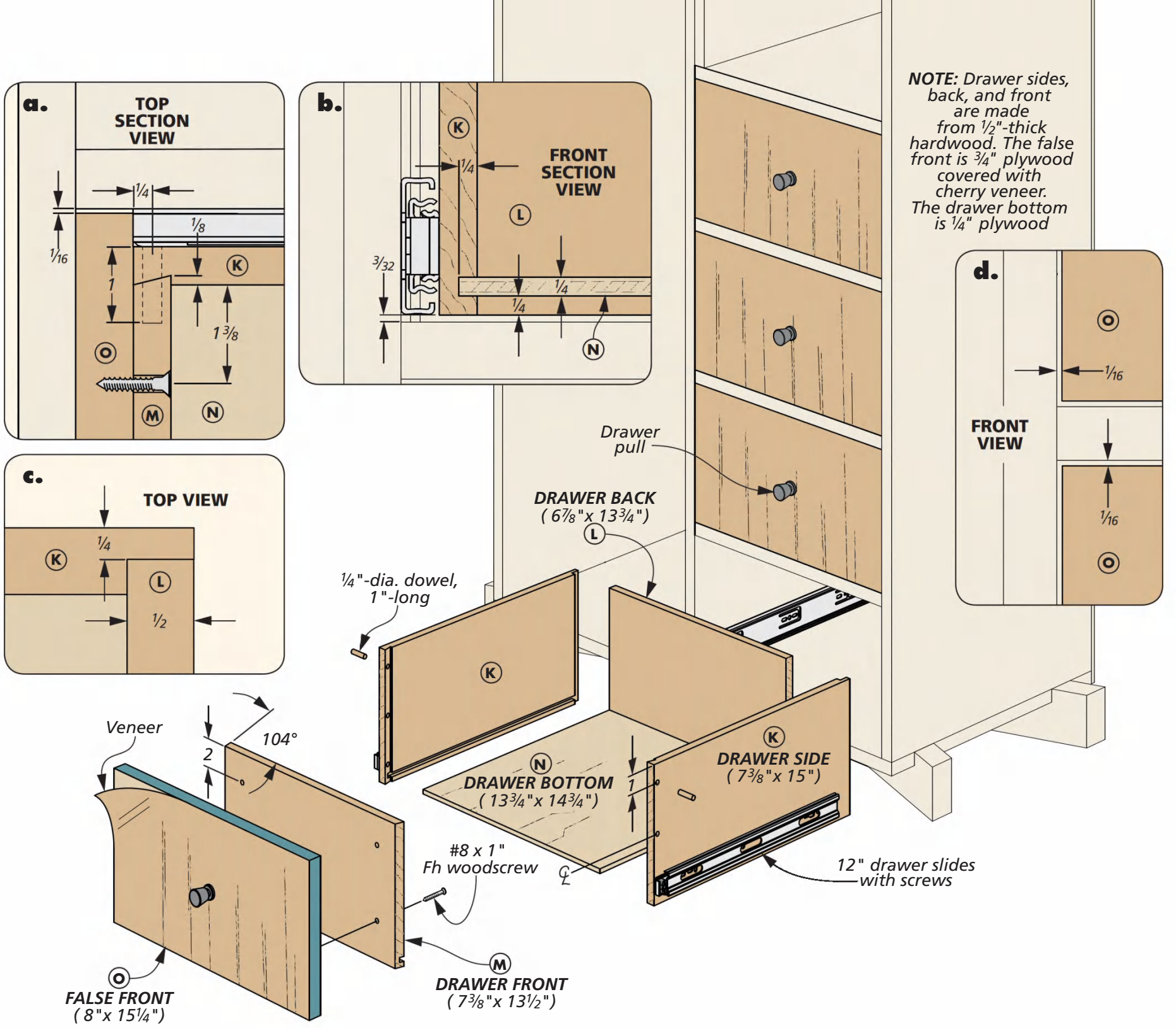

jig that matches the angled half lap that you see in the drawings on the previous page. The half lap is deep, so you'll need to rout it in several passes.

Here's another tip that lets you fit the legs to the case with minimal headache. Start by temporarily screwing the legs together through the half laps.

Then center the legs on the base and mark the ends. Also, scribe the top of the leg where it meets the case. Over at the table saw, trim the ends of the legs. Now you can trim the cleat material to the scribe mark on the leg.

Staying with the theme of making jobs easier, I positioned and screwed the legs to the bottom of the case like you see in detail 'e.' Now it's time to glue the leg cleats in place on top of the legs. After easing the edges and sanding the legs smooth, you can turn your attention to the drawers.

VENEERED DRAWERS

The four drawers for the armoire are made with cherry and plywood bottoms. The false front is Baltic birch plywood that I covered with a cherry veneer.

Start off by cutting all the pieces to size. Then cut the groove for the plywood bottom in the sides, front, and back.

RABBETS. Next up are the rabbets in the sides to hold the back. The joinery on the front edge of the sides has a different twist to it — dovetailed rabbets. These rabbets are made with a dovetail bit and your router table. Online at *Woodsmith.com/255*, you'll find all the information you need to make this joinery.

After assembling the drawers, drill the holes for the dowels (detail 'a') and glue them in place. Attach the drawer slides to the case and the drawer. Now it's time to make the false fronts.

FALSE FRONTS. Notice that the grain of the veneer runs vertically. Glue the veneer in place before giving the false front the same edge treatment as the case. Now center the false fronts and attach them to the drawers. With that done, it's time to make the big doors for the armoire.

To learn how to make dovetailed rabbets, go to:
Woodsmith.com/255

Wrapping up the **DETAILS**

The doors are the last big parts needed to finish the case. They're Baltic birch with the same edge treatment as the other parts.

To throw a whimsical wrench into the works, we added a pull support you see in the main drawing to the right. It's simply a ½" plywood circle that's been glued to the surface of the left door. (More on making the circle in a little while.)

The pull for the door is attached to the pull support with a screw. The head of the screw sits in the opening of the door that's above the drawers.

As for that door, adding a giant notch that makes fun of finger pulls seemed to be appropriate. Making the notch starts with roughing out the opening (as you see in Figure 1 on the next page). I made a template and cleaned up the opening with my router and flushtrim bit. Now let's look at making the circle I mentioned earlier.

CIRCLES

At the top of the next page there's a box that shows a jig that I use with my router table. The jig makes perfect circles every time and has become a go-to fixture in my shop.

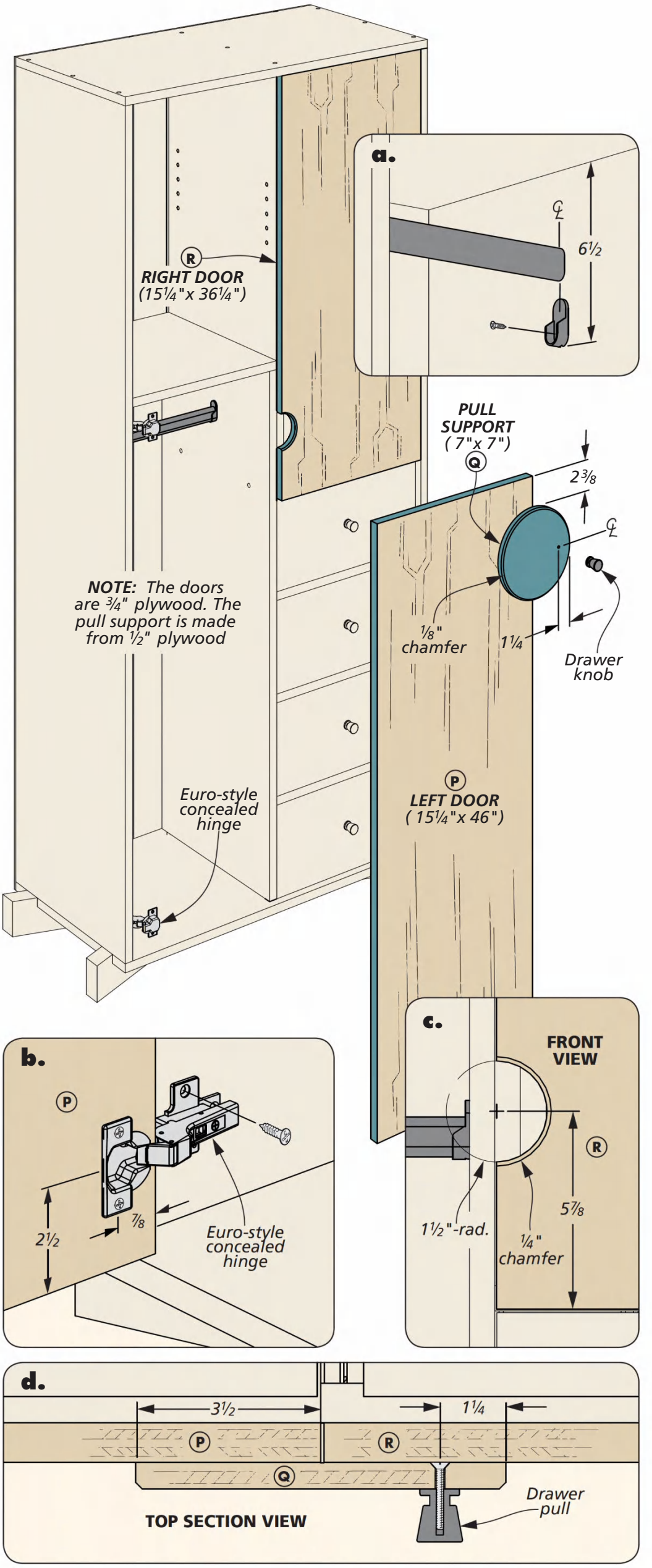

▲ The closet rod and hangers come as a kit. The oval shape of the rod engages firmly with the hanger, preventing any chance of the rod rolling out of the hanger.

CIRCLE JIG & CUTOUT

The jig shown here makes short work of creating the perfectly round, smooth circle needed for the pull support. The jig cradles the top of your router table. The fence of the router table acts as a stop. There are complete details and plans for this on page 6 of Tips & Techniques.

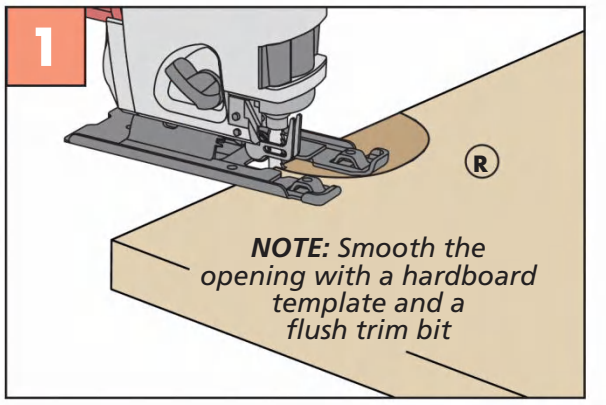

Rough Cut First. Your jig saw will remove most of the waste for the hand opening on the right door.

The circle I need to make is the pull support that you see in the main drawing on the previous page. To hold it on the jig, you'll drill a small hole in the back side of the support. Not to worry though, wood filler will hide the half of the hole that shows.
The edge of the pull support is chamfered, then sanded smooth. Before painting and routing the support and gluing it to the door, I drilled the hole for the knob.

HINGES. Both doors are attached to the case with concealed hinges. Detail 'b' shows the specifications for my hinge. Be sure to confirm those dimensions for your hinges.

Two details remain. First, make the shelves you see in the drawing above. Then install the closet rod the you see in the photo on the previous page. After a couple of coats of lacquer, you'll have an armoire that will last several lifetimes. W

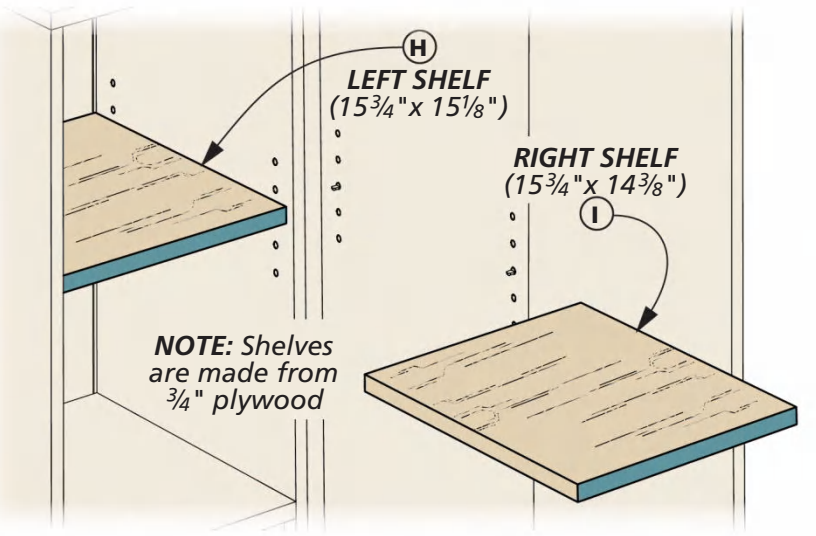

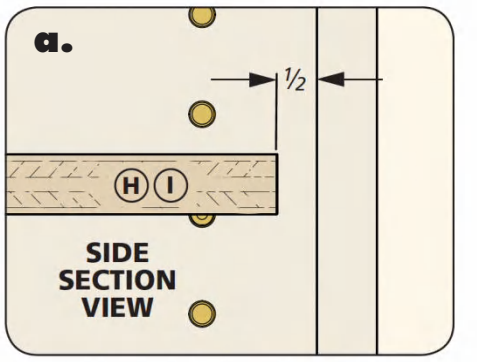

Materials, Supplies & Cutting Diagram

A	Sides (2)	¾ ply. - 17 x 70½
B	Top/Bottom (2)	¾ ply. - 17 x 32
C	Back (1)	¼ MDF - 32 x 72
D	Upper Divider (1)	¾ ply. - 16¼ x 35½
E	Lower Divider (1)	¾ ply. - 16¼ x 45¼
F	Shelf Dividers (2)	¾ ply. - 15¼ x 16¼
G	Drawer Shelves (3)	¾ ply. - 15¼ x 16¼
H	Left Shelf (1)	¾ ply. - 15¾ x 15⅛
I	Right Shelf (1)	¾ ply. - 15¾ x 14⅜
J	Legs (2)	3 x 1½ - 38⅞
K	Drawer Sides (8)	½ x 7⅜ - 15
L	Drawer Backs (4)	½ x 6⅞ - 13¾
M	Drawer Fronts (4)	½ x 7⅜ - 13½
N	Drawer Bottoms (4)	¼ ply. - 13¾ x 14¾
O	False Fronts (4)	¾ ply. - 8 x 15¼
P	Left Door (1)	¾ ply. - 15¼ x 46
Q	Pull Support (1)	½ ply. - 7 x 7
R	Right Door (1)	¾ ply. - 15¼ x 36¼

- (22) #8 x 1¼" Fh Woodscrews
- (24) Pocket Screws
- (40) ¼" Shelf Pin Sleeves
- (8) ¼" Shelf Pins
- (8) #8 x 2¼" Fh Woodscrews
- (16) #8 x 1" Fh Woodscrews
- (4) Pr. 14" Full-Extension Drawer Slides
- (5) Drawer Knobs
- (2) Pr. 110° Euro Hinges
- (1) Closet Rod and Hanger

½"x 7½"- 66" Cherry (Two Boards @ 3.4 Sq. Ft. Each)

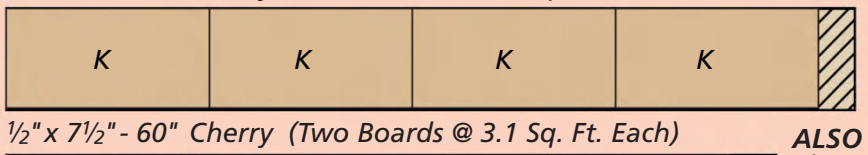

½"x 7½"- 60" Cherry (Two Boards @ 3.1 Sq. Ft. Each)

1½"x 7"- 48" Cherry (4.7 Bd. Ft.)

ALSO NEEDED: *Three 48"x 96" Sheets of ¾" Baltic birch Plywood, One 48"x 48" Sheet of ¼" birch Plywood, One 48"x 96" Sheet of ¼" MDF beadboard Plywood, One 12" x 12" Sheet of ¼ " plywood, One Sheet of 16" x 32" cherry veneer*

SOURCES:
Rockler.com
Shelf pin sleeves.....22872
Shelf pins.....27765
Euro hinges.....34807
14" Drawer slides..44375
Closet rod kit.....41172
Black knob.....1011283

Opening the drawer on one end of the board reveals storage for all of the chess pieces. Easy-to-apply flocking gives the interior of the drawer a soft, luxurious feel.

Written by: Logan Wittmer; Project Design: Chris Fitch

Chess Set

Pull up a seat, put on your thinking cap, and start the timer. This elegant chess set is the perfect way to hone your mind, and your woodworking skills.

Stemming from India in the 7th century, chess is the ultimate game of strategy. What appears to be a simple objective on the surface, capture the opponent's king, is much more involved than that. There are few games that require more planning, strategy, and cunning, than chess. This modern take on the classic game is sure to get the attention of your opponent, and maybe give you an edge.

DESIGN DETAILS. As you can see in the photo, this elegant chess set features a walnut and maple playing surface that appears to float above the base. A soft, flocked drawer allows you to safely store the chess pieces when not in use. While the playing surface is beautiful, the real show-stopper, in my opinion, is the set of pieces.

SOME TURNED, SOME SAWN. While the knights are made at the band saw, most of the other pieces require a little bit of time at the lathe. But don't worry. You don't need to be a turning wizard to conjure up these pieces. Some basic turning skills and a few simple tools will help you create the shapes needed for this set. The biggest challenge, perhaps, is the helmet-shaped pawn. However, turning the blank, removing some waste at the band saw, and gluing it back together creates the oblong, helmet shape.

But put the turning out of your mind for now. The first thing to knock out is the chess board, so that's your opening move.

Each of the chess pieces presents a unique challenge. While most of them are turned on the lathe, each one requires a slightly different technique to create its unique looks.

Illustrations: Dirk Ver Steeg

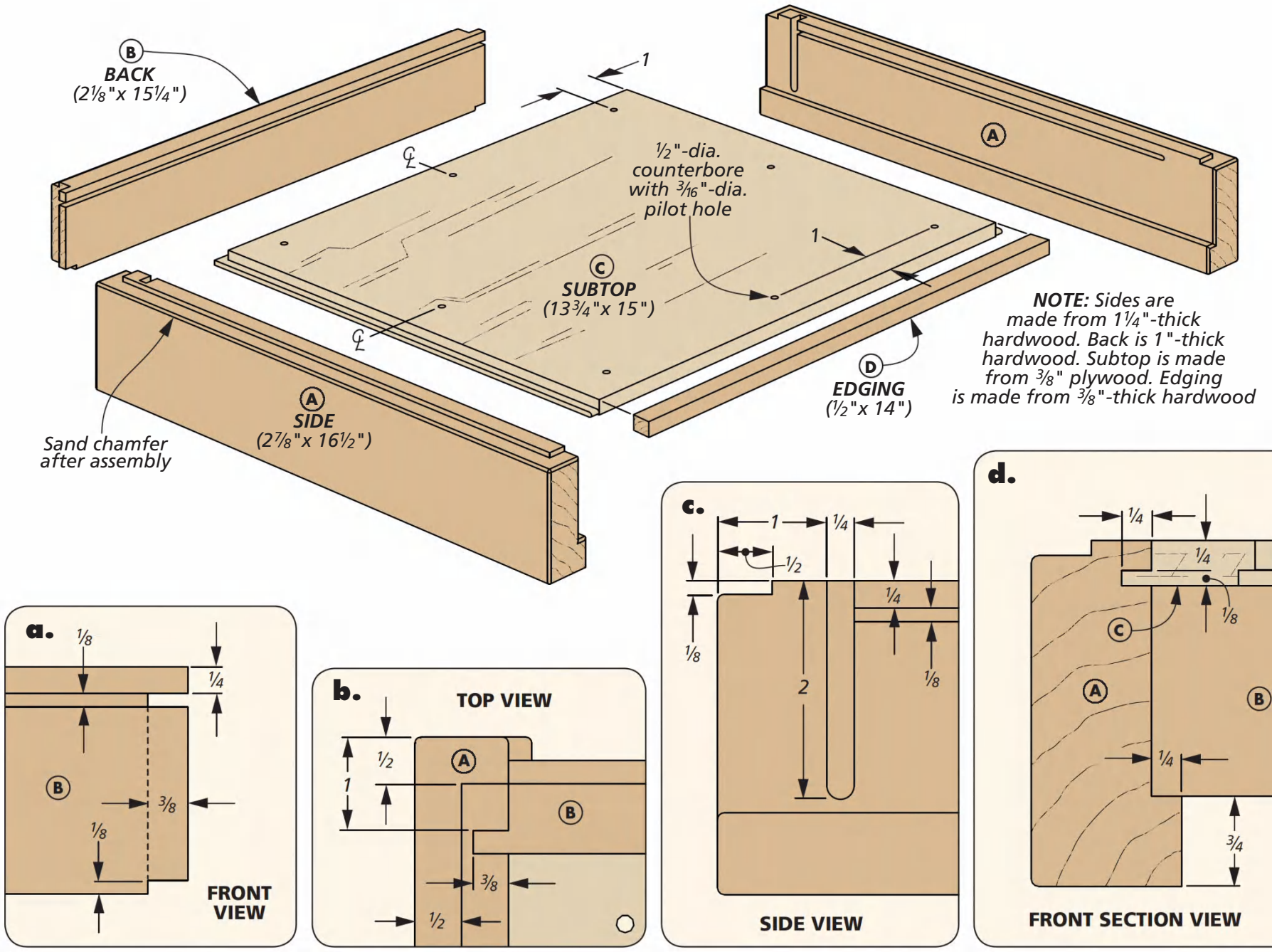

Start from the **BOTTOM**

Construction on the chess board starts with the base, as you see above. The base is made from walnut with a plywood bottom. A series of tongue and dadoes lock the base together.

SIDES. As you look at the drawing above, you'll see that the sides are by far the most complicated piece for the base. A wide rabbet creates a ledge on the inside for the drawer, and another rabbet creates a ledge on top to make the playing surface "float." A series of stopped grooves and dadoes holds the sub top and back to the sides.

Cutting the stopped grooves is up first. That's best done while the sides are still square, with no rabbets. Do this at the router table. My setup can be seen in Figure 1 and 2 on the next page. Mark the bit's location on the fence, and lower the left side onto the spinning bit. Then, rout the dado. Do the same with the right side, but simply push the workpiece until the dado is finished and shut the router off before removing the workpiece.

This setup works nicely for the long, stopped groove as well. Lower the workpiece over the bit and rout until the bit enters the stopped dado you just made. Leave this setup at your router table for now — you'll use the same setting for the back shortly.

WIDE RABBETS. With the joinery done, let's tackle the rabbets that form the ledges. This is best done at the table saw. Start, by defining the edge of the ledge with a dado blade. Then, bury the dado blade in an auxiliary fence, and stand the workpiece on edge to cut away the remainder of the waste. See Figure 4 on the next page for this setup. Now you can leave the sides alone while we make the back.

SIMPLE BACK. The back has a through groove that matches up with the stopped grooves in the sides. As before, cut this at the router table. Then, form the tongue to fit in the stopped dadoes in the sides. You can see my setup in Figure 5. Use a dado blade to set the tongue thickness, testing the fit in the dado. Then, trim off the

tongue to fit in the dado (detail '5b'). Personally, I trimmed the tongues a little shorter than the dado, so I didn't have to square up the dado or round the tongue.

SUBTOP. The final part of the case is the plywood subtop. This is rabbeted to fit in the grooves around the inside of the case. After cutting the rabbets at the table saw, drill the mounting holes that will hold the playing surface (you'll make that in a bit).

RABBET & ASSEMBLE. After gluing up the case, cut some edging to fit and add it to the exposed plywood edge. Now, we'll cut the rabbet around the entire top of the case. This will "lift" the playing surface off the base. This can be done at the table saw with a dado blade. Figure 6 and '6a' below gives all the details that you need to finish this final step on the base.

MAKE THE BASE PARTS

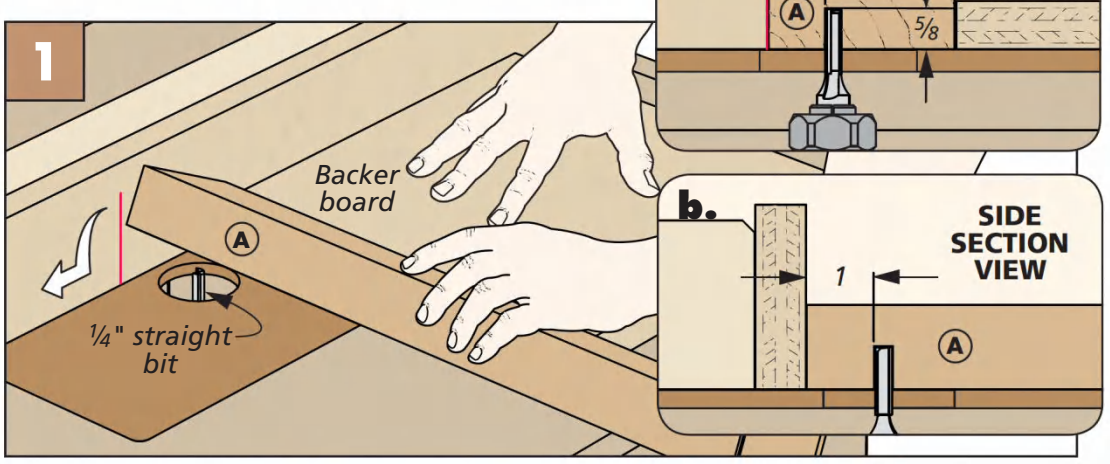

Left Side. Mark the start location for the left side on your router fence. Then, turn the router on and lower the workpiece over the bit, lining it up with the start point. Rout the dado through the workpiece.

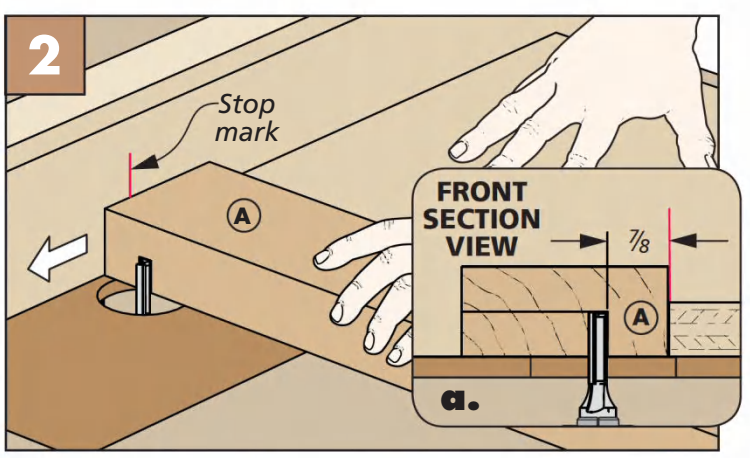

Right Side. Now, mark the stop location on the router fence. Rout until the right side edge lines up with the stop mark and turn off the router.

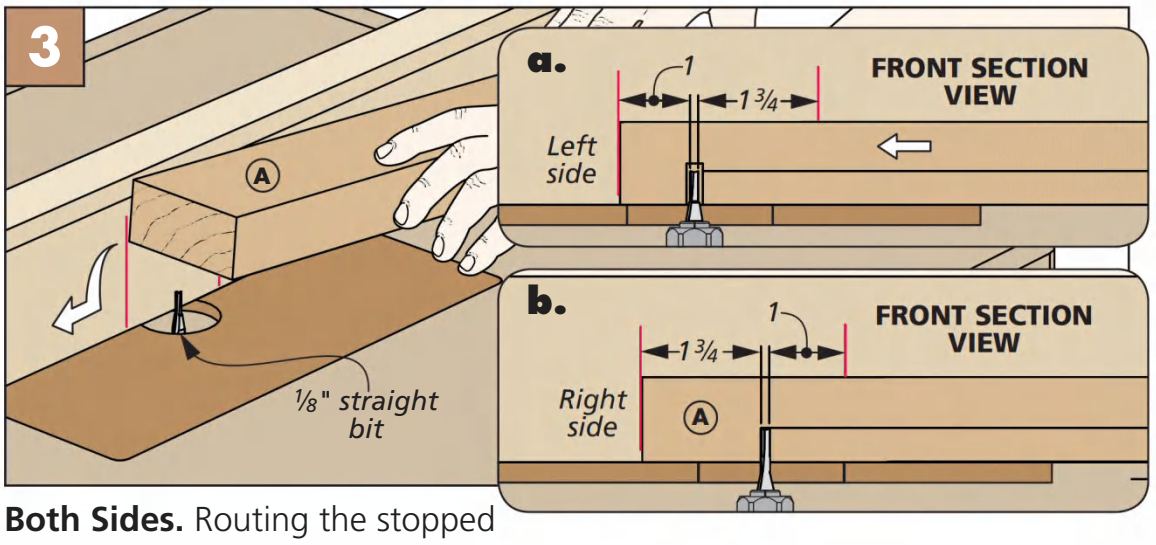

Both Sides. Routing the stopped groove follows the same process as the dadoes, except this time, you'll mark both the start and stop points on the router table fence.

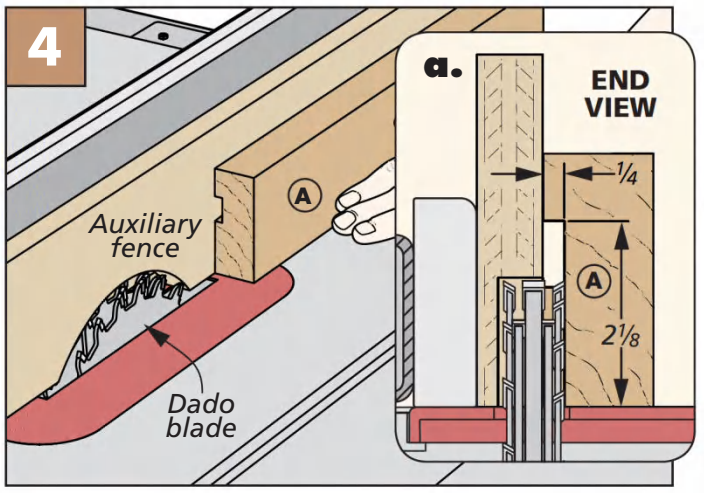

Wide Rabbets. Define the ledge with a dado blade. Keep pressure against the top edge of the workpiece so the bottom doesn't kick in.

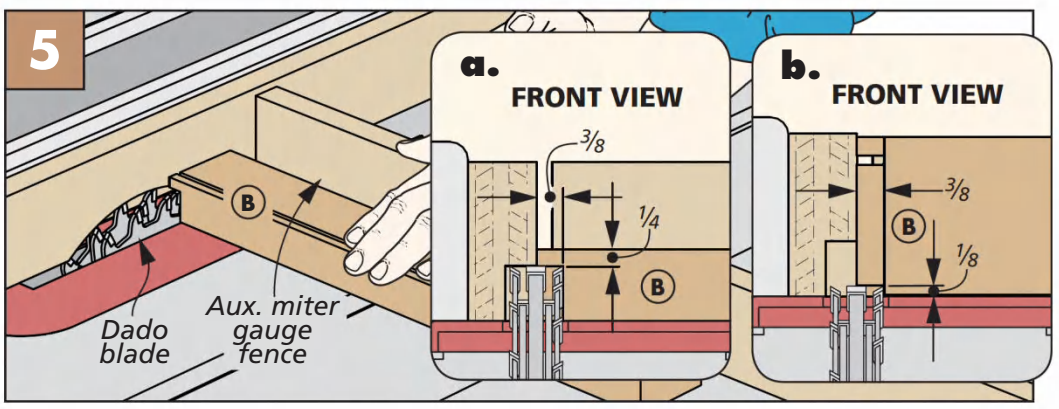

Thin Tongues. Set the dado blade height to cut the tongue on the back. After test fitting the tongue's thickness, flip the workpiece on edge and cut away the shoulders of the tongue.

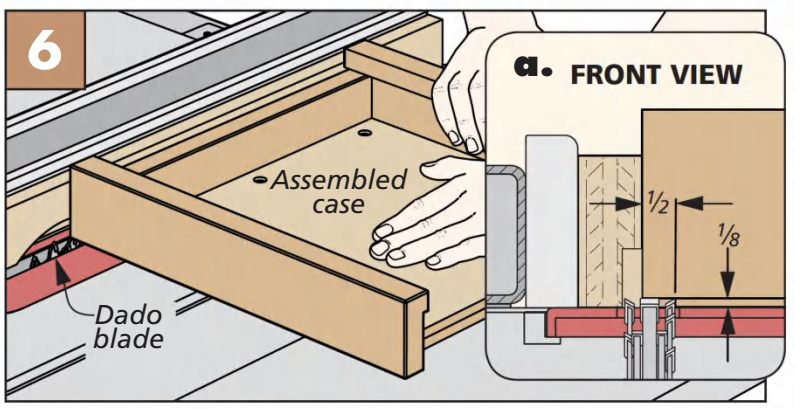

Rabbets All Around. After assembling the case, bury a dado blade in an auxiliary fence and cut a rabbet around the top edge of the case.

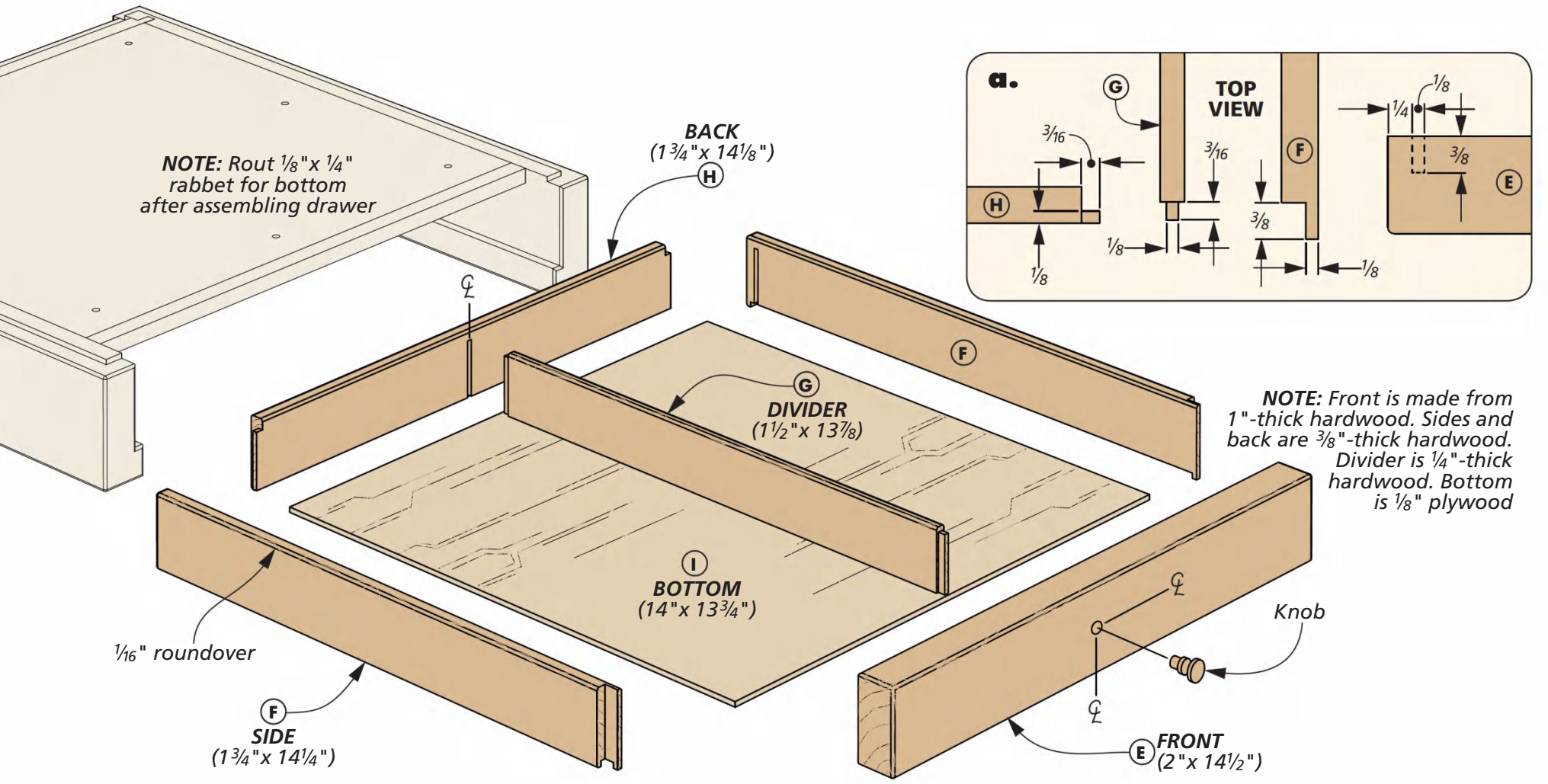

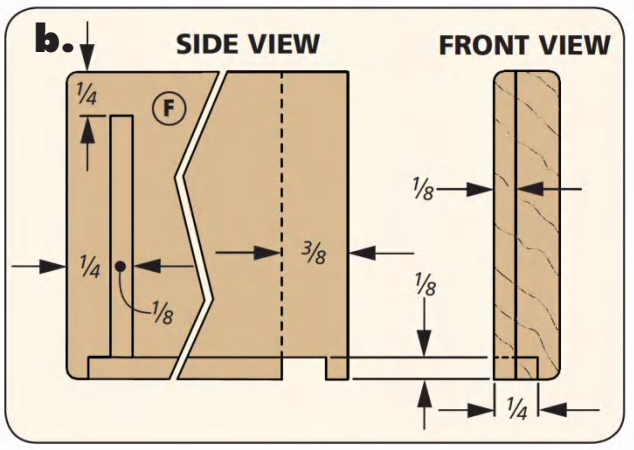

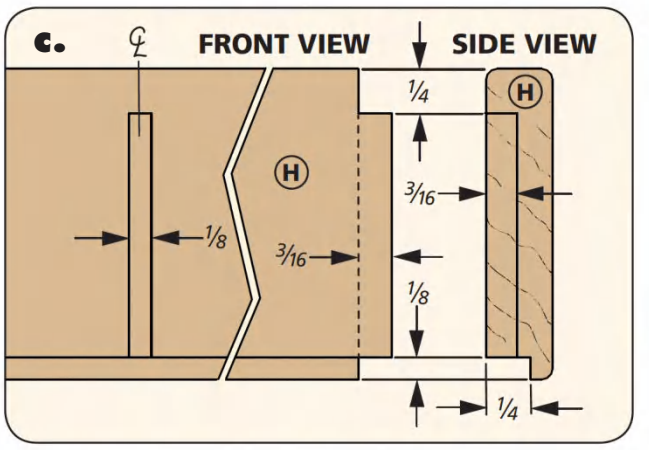

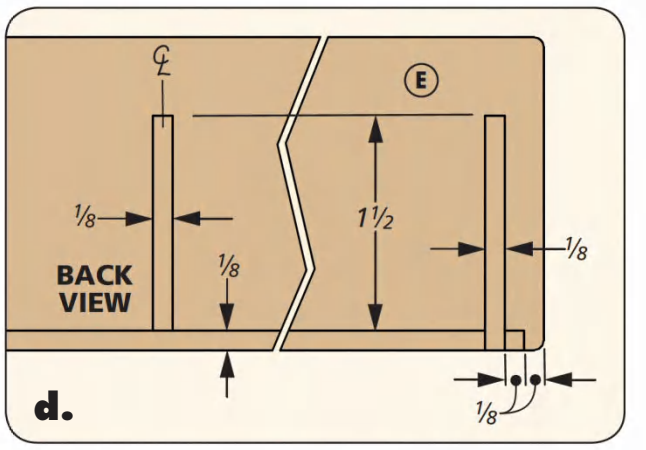

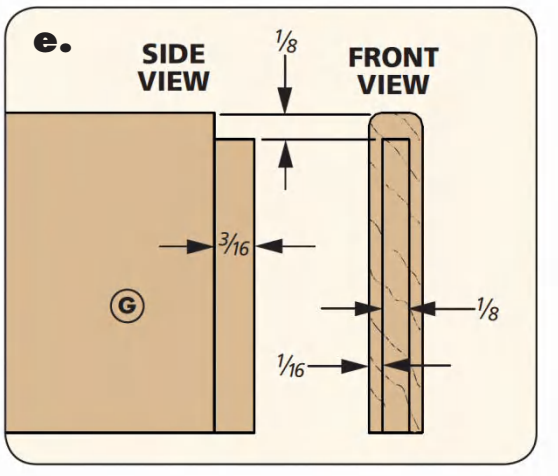

Add **BARRACKS**

To finish out the case, we're going to add a drawer. This houses the pieces until they're called into action for a game. As you can see above, the drawer is pretty straightforward, but unlike most drawers, it has a divider to split the armies.

FULL DRAWER FIRST. Making the drawer commences with sizing all of the parts. Note that the front of the drawer is thicker than the back, sides, and divider.

With the parts whipped into shape, you can tackle the joinery that unites them. Like the case, the joinery here is a series of tongues that mate into stopped dadoes.

As before, mark the stop position on your fence for each workpiece's respective dadoes. Start with the dadoes in the front first. There are three here — one dado for each of the sides and the centered one for the divider. While you're cutting the divider dado, cut the matching dado in the back.

Setting the front and back aside, cut the dadoes in the sides. Each side only has one dado (for the back).

TONGUES NEXT. Cutting the tongues comes next. The divider tongue is centered. Cut this first, then knock out the side and back tongues. With the joinery cut, you can assemble the drawer. The bottom slips into a rabbet that you can cut at the router table with a rabbeting bit, and is glued in place. The final details on the drawer are a knob and flocking the interior. You can purchase a knob that suits your style, or you can turn one, like I did. Just make sure the tenon on the knob matches your hole in the front of the drawer for a good secure connection.

PLAYING SURFACE

The playing surface for a chess or checker board is where the rubber meets the road so to speak. There is some special attention you need to pay when you're working on the top, as any inconsistences will show up in the final pattern. And, before you get started, I would suggest using epoxy for this glueup. There's a lot of end grain contact here, and epoxy does the best job of holding this otherwise weak joint together.

PREP IS THE KEY. The playing surface shown here is made from alternating walnut and maple. Start with extra-long stock (four strips of each material) and surface it all at the same time — you want it all to be the same thickness. Then, rip them all to the exact same width. These get glued up in an alternating pattern — you can see this in Figure 1 below. Keep the strips flush as possible and let the glue dry.

CUT IT APART. This is where the magic happens. Cross cut the blank into strips, the same width as you ripped the initial stock. Now, it's a simple matter of laying them out to match what's shown here. As long as your cutting was accurate, you should end up with a nearly perfect pattern. Now, you'll want to re-glue these up into the square playing surface. Pay special attention as you're gluing them up, as you don't want any of the strips to slip and create offset squares.

MOUNT IT. Once the glue is cured and any squeeze out is scraped off and sanded away, you can soften the edge at the router table with a chamfer bit. Then, you can mount the surface. Do this with screws through the sub top into the bottom of the playing surface. A couple of clamps will hold the playing surface in the perfect spot while you drive the screws home.

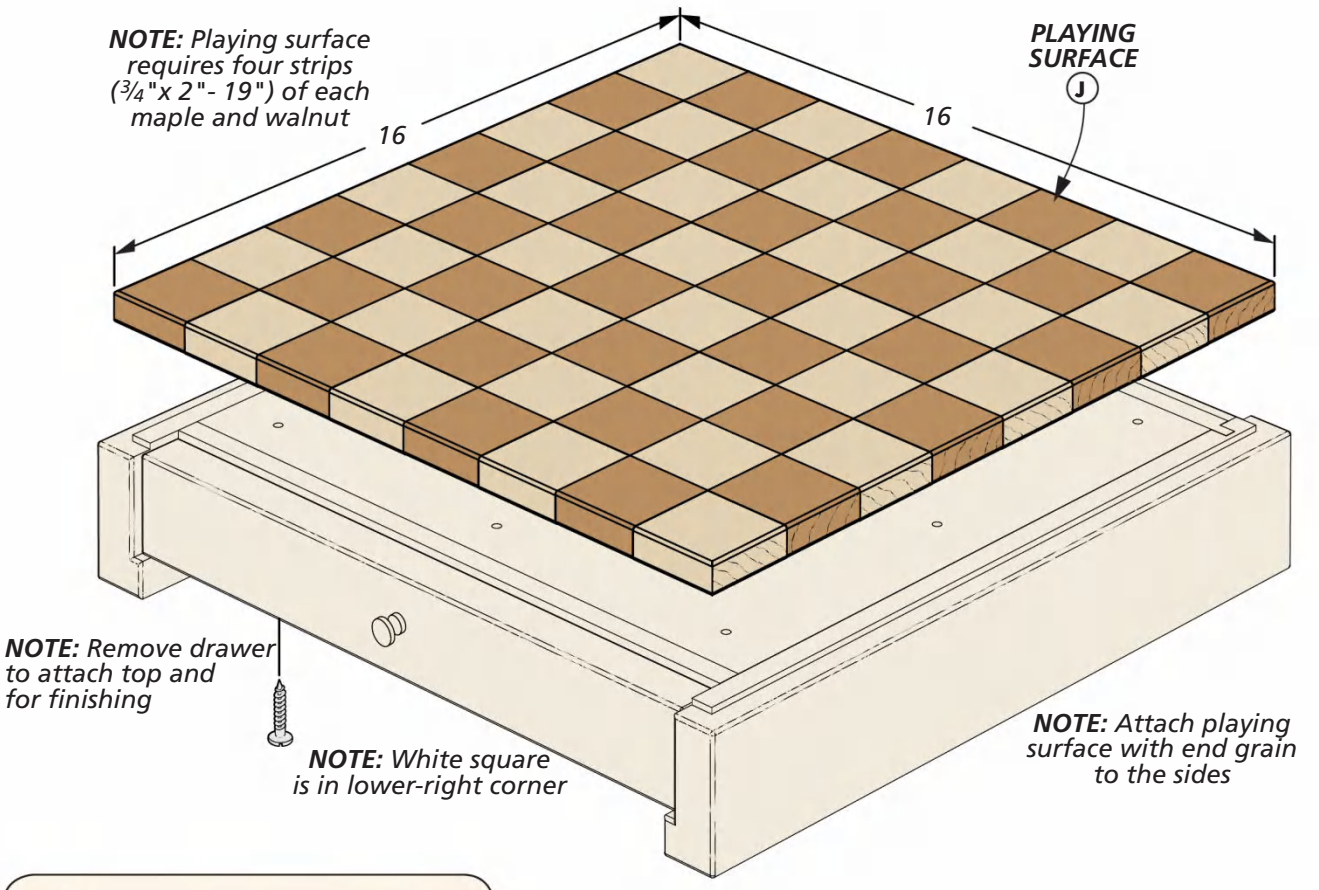

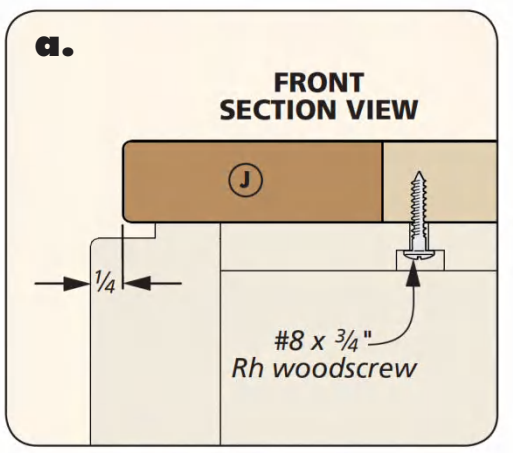

PREPARE THE BATTLEFIELD

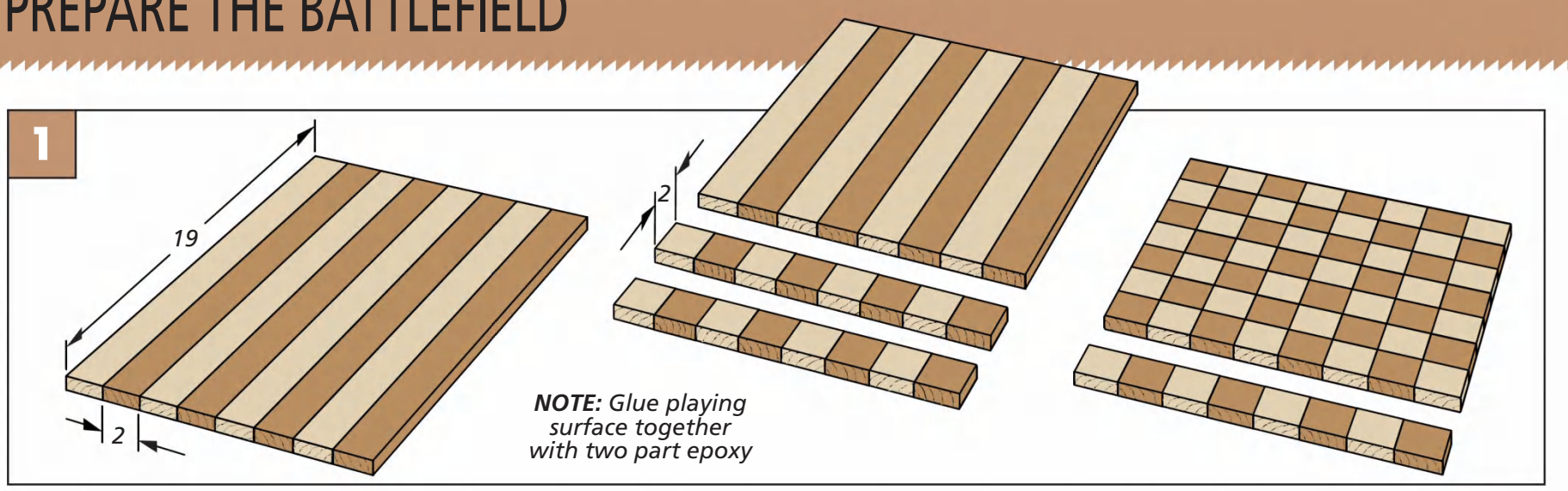

Strips First. The playing surface is made up of alternating squares. To easily create this look, start by gluing contrasting strips together. Then, cross cut the blank into new strips, with alternating blocks. Finally, reassemble the board, and use epoxy to glue up the playing surface, with the alternating pattern that you see above.

Build an **ARMY**

The last piece (pun intended) of this project is to make the turned game pieces. If you don't do a lot of turning, a good set of carbide turning tools makes it easier. Just take it slow. Here's a few tips with each piece.

THE KNIGHTS. The knights are cut to shape at the band saw. Define the neck of the horse at the drill press (Fig. 1), then band saw the shape out, as seen in Figure 2.

PAWN. The pawns are the trickiest to turn, because of the oblong shape. In short, they're turned and the middle slice is removed at the band saw. Check out the video on *Woodsmith.com/255* to see the process.

ROOK. To create the rook, start by drilling a stopped hole, as you see in Figure 4. Then, kerf the end of the blank to form the cross, as seen in Figure 5. Finally, turn it to shape.

THE BISHOP & KING. The bishop and the king follow the same path. Start out by turning them to shape, but leaving some square waste on one end. You'll use it to clamp the pieces to the miter gauge at the table saw. There, you'll create the slot in each piece (see below). The king slot is square to the blank, but you'll tilt the blade for the bishop.

THE QUEEN. The queen is the simplest operation. She's turned to shape and sanded. After turning and sanding the pieces, flock the bottoms. Now, sit back and relax. It's your move. W

GO 2 Online Extras

For a video on turning the pawn, go to:
Woodsmith.com/255

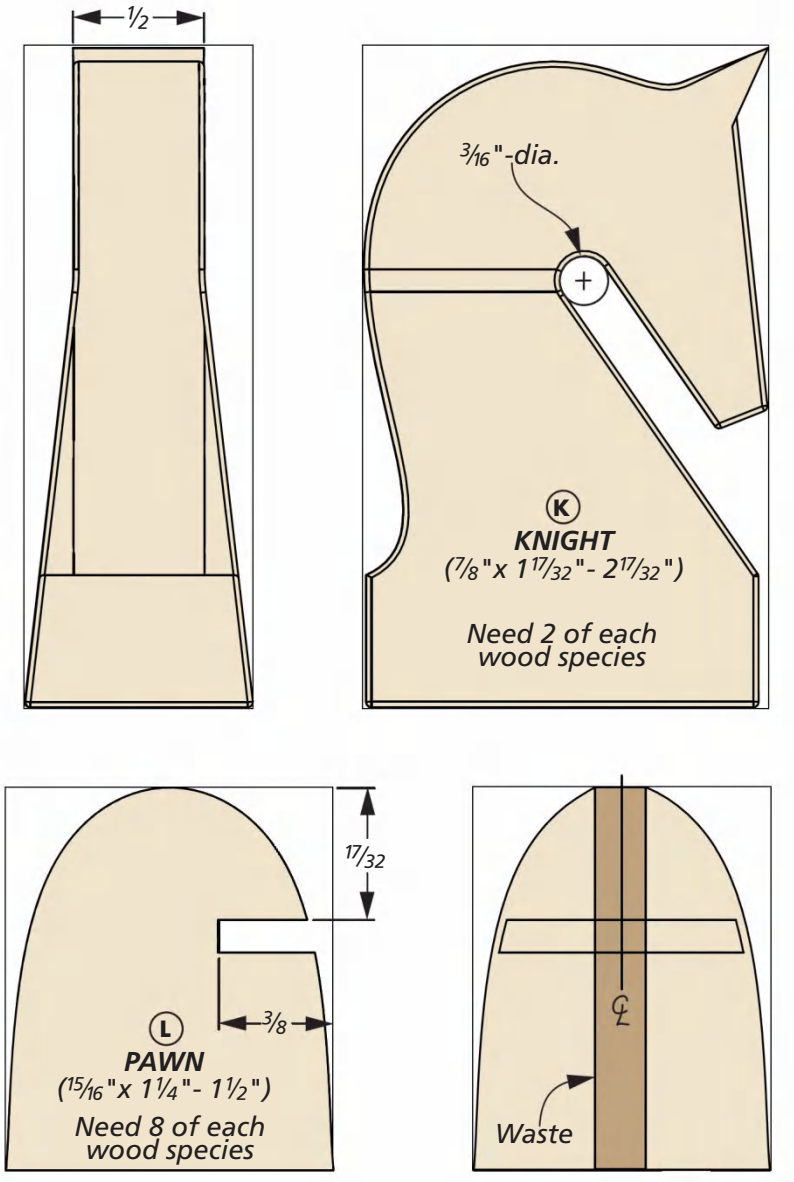

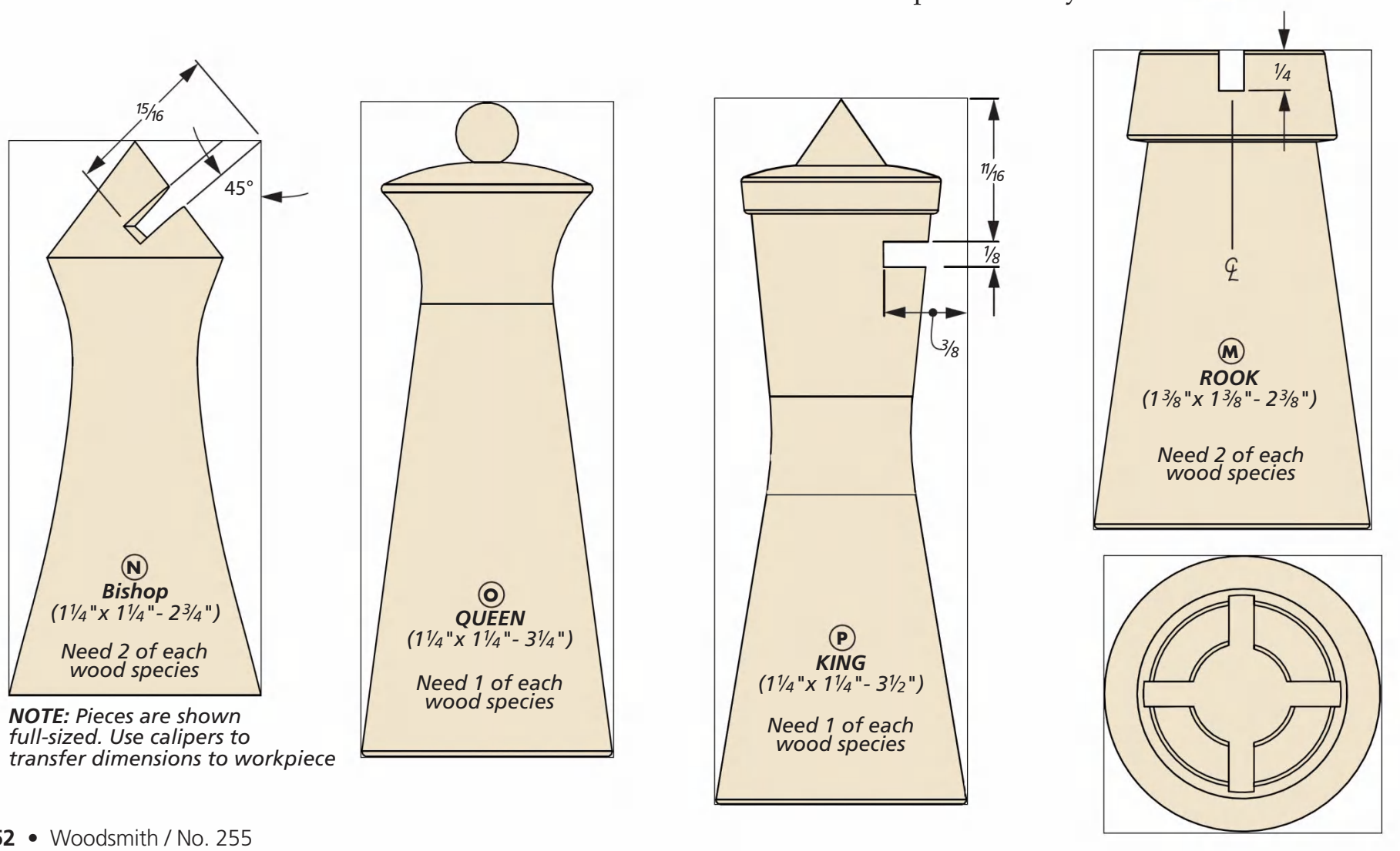

NOTE: *Pieces are shown full-sized. Use calipers to transfer dimensions to workpiece*

TURNING WOOD INTO AN ARMY

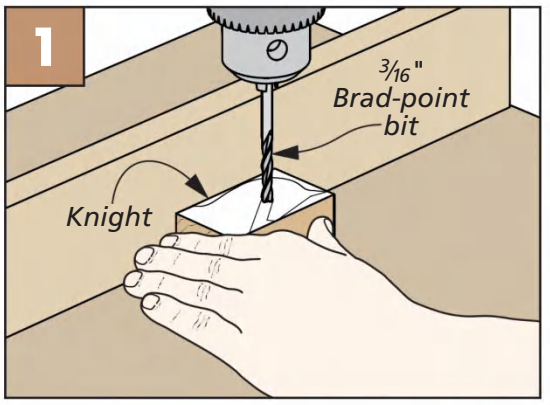

Horses Neck. Define the end of the horses neck by drilling it out with a brad-point bit.

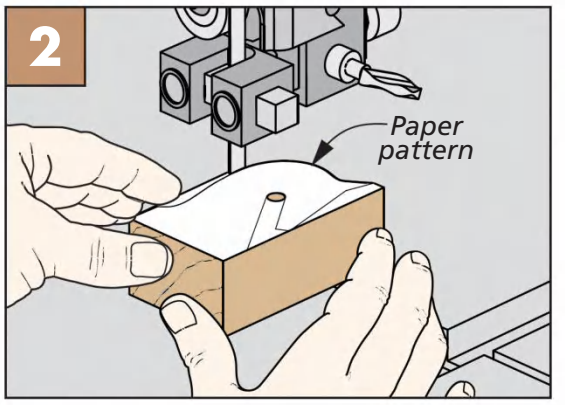

Shape the Knight. Use a band saw to shape the knights. A narrow blade allows you to easily follow the pattern.

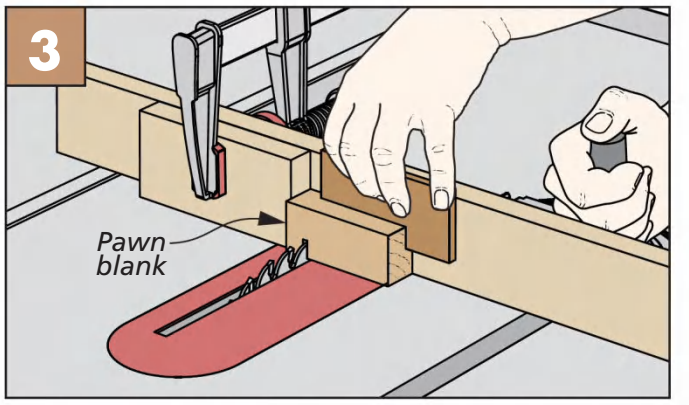

Kerf the Pawn. Kerf the pawn blanks for the visor. After turning, create the football shape by removing the center section at the band saw.

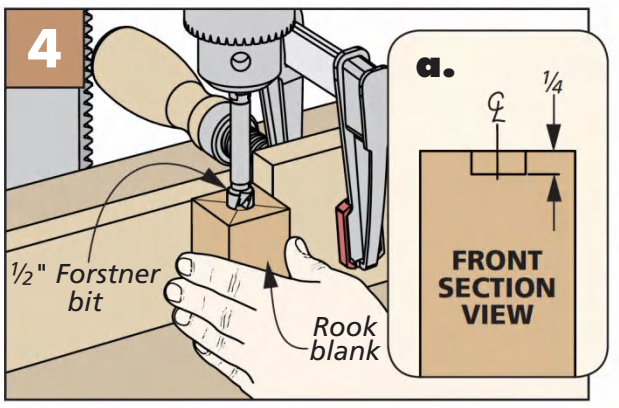

Rook Holes. Drill the end of a blank for the hole in the top of the rook. Use a stop block to position all four rook blanks.

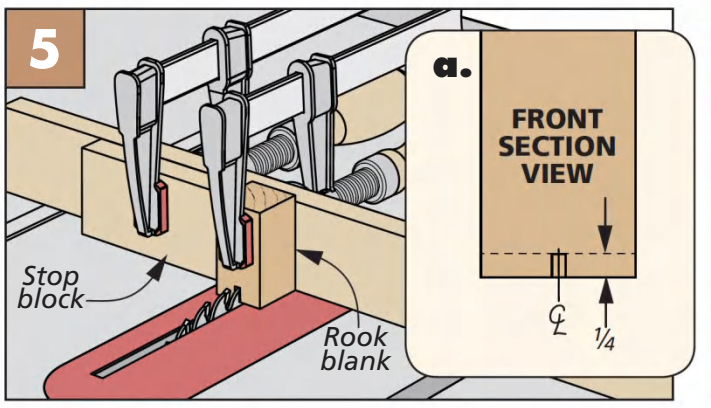

Cross It. Create the cross through the stopped hole at the table saw. Make a kerf, then turn the blank 90° to complete the cross.

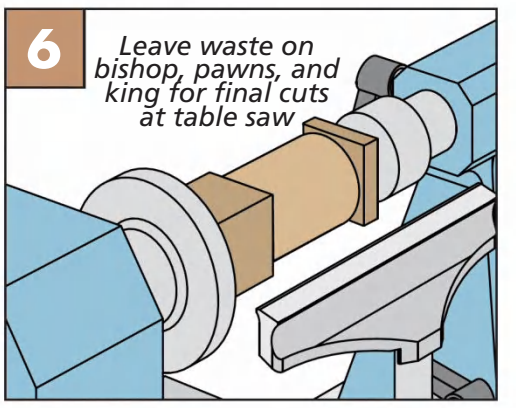

Drive Spur. You can hold the pieces with a four jaw chuck, or with a drive spur.

Materials, Supplies, & Cutting Diagram

A	Sides (2)	1¼ x 2⅞ - 16½	**G**	Divider (1)	¼ x 1½ - 13⅞	**M**	Rook (4)	1⅜ x 1⅜ - 2⅜
B	Back (1)	1 x 2⅛ - 15¼	**H**	Drawer Back (1)	⅜ x 1¾ - 14⅛	**N**	Bishop (4)	1¼ x 1¼ - 2¾
C	Sub Top (1)	⅜ ply. - 13¾ x 15	**I**	Drawer Bottom (1)	⅛ ply. - 14 x 13¾	**O**	Queen (2)	1¼ x 1¼ - 3¼
D	Edging (1)	⅜ x ½ - 14	**J**	Top (1)	¾ x 16 - 16	**P**	King (2)	1¼ x 1¼ - 3½
E	Drawer Front (1)	1 x 2 - 14½	**K**	Knight (4)	⅞ x 1 17/32 - 2 17/32	•	(1) ½" Knob	
F	Drawer Sides (2)	⅜ x 1¾ - 14¼	**L**	Pawn (16)	1 x 1¼ - 1½	•	(9) #8 x ¾" FH Woodscrews	

1⅜" x 4½" - 60" Hard Maple (2.6 Bd. Ft.)

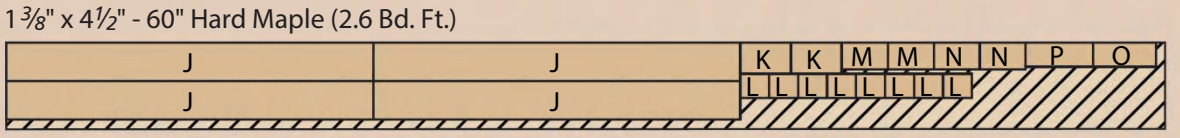

ALSO NEEDED: *One 24"x 24" sheet each of ⅜" and ⅛" Baltic birch plywood*

½" x 3" - 60" Walnut (1.3 Sq. Ft.)

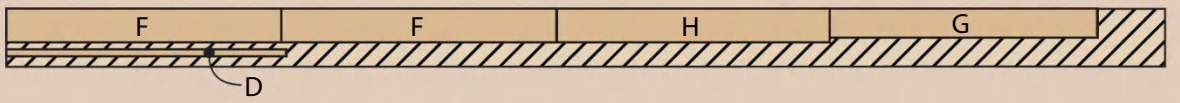

Sources:
Rockler.com
Black Flocking...40288
Flocking Adhesive...40270
Brass Knob...27755

1¼" x 3½" - 72" Walnut (3.5 Bd. Ft.)

1⅜" x 4½" - 60" Walnut (3.7 Bd. Ft.)

Using Crooked Knives

Hook knives do a great job of creating concave shapes and, depending on their design, could be used from start to finish when hollowing small, shallow bowls. You could even start your cuts with a gouge then move on to the hook knife only when your gouge stops performing well. This uses different muscle groups and helps prevent fatigue and injury.

THUMB AS A BRACE

To create a shallow bowl like the one made with a bent gouge, but with a hook knife, again start by taking a cut across the grain in the center of the hollow. Use your thumb to brace against the side of the blank to create leverage and maintain control.

A left-handed hook knife (with the sharp edge on the right side of the blade) can be pushed by a right-handed carver (photo A on the next page) or pulled by a lefty, and the opposite for the right-handed blade (with the sharp edge on the left side), which is pulled by a righty (B) and pushed by a lefty.

When pushing the blade, your non-dominant thumb acts as the safety, offering support behind the blade and never loses contact with it. When pulling the blade, your dominant thumb is the safety. The squeeze of your hand toward your thumb will drive the cut, while your thumb will provide the stability to offer some resistance and allow you to engage the edge of the tool throughout the entire cut, making slight changes to accommodate the various shapes.

TECHNIQUE PREVENTS INJURY

So how do you avoid cutting into your thumb? Practice, awareness, and the type of grip used are all factors in avoiding this nasty little injury. If you extend your thumb far enough away from the hook's cutting trajectory or on a different plane, while taking heavier cuts, the natural squeeze of your grip

Text & Photos courtesy of Danielle Rose Byrd

usually doesn't allow for the hook to reach your thumb.

Adopting this safe grip early on will help to make it a habit. Some cuts can be made while your thumb is very close to the cutting edge, and just as with many things, it requires skill and technique to avoid injury. This type of cut is made when only a small amount of material needs to be removed, and so not much movement is necessary.

The grip starts tight with your hand choked up on the handle, (C) and small squeezes are all that's needed to allow for subtle movements of the tool edge. (D) By choking up on the handle of the tool, you're automatically limiting its range of motion, which decreases the chance of injury as well.

PUSH/PULL TECHNIQUE

Continue working as deep as the hook knife will allow without chattering. Skew the blade slightly in different directions to see which will give you the smoothest cut.

As you go deeper, you'll expose more end grain on either end of the bowl. The relationship between end grain and long grain poses similar grain difficulties as in previous bowls no matter what tool you're using, so working end grain on either end of the bowl (either inside the hollow or outside) will take more force than cutting with the long grain.

This is where the push/pull method becomes particularly important. Establishing an anchor allows you to both exert the amount of force needed to get through the end-grain cuts, and the resistance needed to avoid gouging another part of the bowl once less force is required. A considerable amount of skill and control is crucial to ease off the tool while still engaging the knife's edge for a continuously smooth cut. W

Working across the grain allows you to remove material quickly. Use the thumb on your other hand to drive the blade forward.

Another option is to pull the knife using your dominant hand. Keep your thumb tucked below and away from the path of the blade.

For fine, trim cuts, extend your hand with your thumb protected. Choke up on the handle for maximum control.

Slowly squeeze your hand together to make the cut. Sweep into and out of the cut to make crisp, blended cuts.

HAND TOOLS & BOWLS

Creating wood utensils like bowls, spoons, and cups connects many woodworkers to the material like no other project. Using a handmade utensil is just as personal.
In her new book *The Handcarved Bowl*, Danielle Rose Byrd presents woodworkers with a tree-to-bowl look at the process. In addition to several bowl styles, you'll find an in-depth discussion of tools and sharpening. This article is excerpted and adapted from the book with permission.

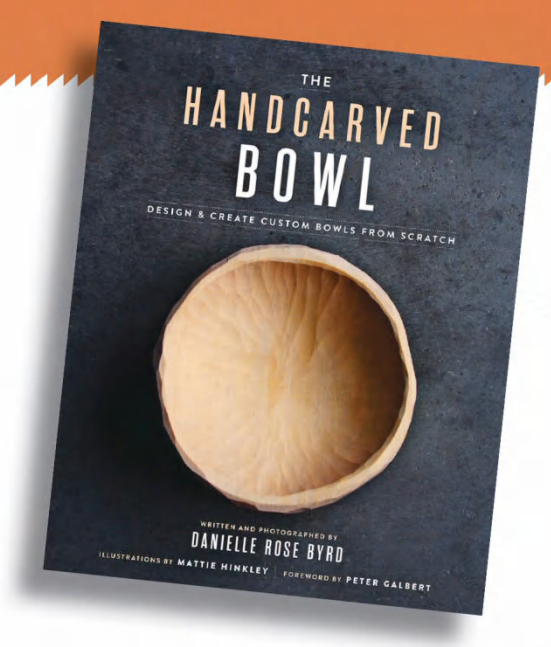

Quickstart Drill Press Guide

For years, both corded and cordless drills handled the hole drilling tasks in my shop. As my skills increased (along with the size of the projects) it became obvious that a hand-held drill didn't supply the accuracy I needed. And, it certainly didn't allow me to use some drill bits, like Forstner-style bits, to their full advantage. So I bit the bullet and added a drill press to my arsenal of shop equipment. And it took my drilling tasks to the next level.

The challenge with a drill press, whether it be a floor or benchtop model, is that it's really designed for machine shops where drilling metal takes center stage. While drilling metal, and other materials like plastic, is something I do fairly often, I needed to "upgrade" my drill press to better handle all the softwood and hardwoods that I work on.

What follows is a "Quickstart Guide" to the upgrades you need to outfit your drill press for woodworking. The guide centers around some

Written by: Bryan Nelson

▲ Drill bits comes in a range of types and sizes. What you use depends on the type of materials you're working with and the results you need.

key items, namely drill bits, table upgrades, and a couple of techniques to get the best results.

DRILL BIT BASICS. If you have a hand-held drill, I'm guessing you already have some drill bits. Most likely a set of twist bits that came in a metal or plastic case (far left bit above). They're inexpensive and great for general purpose work, whether you're drilling metal, drywall, or wood. However, while they work for drilling wood, they often tear out the edges of the hole.

CLEANER ENTRY. It wasn't long before I invested in a set of brad-point bits (second bit to left). Brad-point bits are designed with cutting spurs at the edge so they leave much cleaner entry holes, which is important for things like shelf pin holes. Plus, when you provide support on the back side of a workpiece (more on this later), you'll get clean exit holes, as well. These days, I find myself using brad-point bits for almost all my drilling needs in wood and sheet goods and have relegated my twist bits for the metal work they were designed for.

BIGGER HOLES. Brad point bits cover most of my drilling needs until the hole size starts getting larger than ½". When that's the case, it's time to switch to another type of bit. For these larger holes, the first bits I opted to use were spade bits, like the ones you see second to right right. They're inexpensive and depending on your needs can provide just the right solution.

Spade bits can be a challenge when it comes to fine woodworking, though. They'll most likely tear out the upper edges of the hole you're drilling and, unless well supported, the tearout will be even worse on the exit side.

CLEANCUT RESULTS. Here's where the Forstner bit comes into play (far right bit above). Like spade bits, they come in much larger sizes and like brad point bits, Forstner bits are designed with cutting spurs along the edge. This means they leave a crisp clean edge. And the bit design also leaves a hole with a flat bottom. Another advantage shows up when you're creating mortises. It's a simple process to drill overlapping holes to remove the bulk of the waste. For these reasons, a Forstner is my bit of choice any time I need to drill a hole larger than ⅜".

SQUARING THE TABLE. Once you have the right bits in hand, it's a good idea to make sure the drill press table is square to the chuck that holds the bit. A simple way to do this is to install a straight, steel rod in the chuck and check the table alignment to the rod with a square. If everything lines up, you're good to go.

◄ Adjust your drilling speed (chart below) to match the drill bit and the material you're working with.

Woodsmith® Bit Speed Chart

Twist/Brad Point Bit	Softwoods RPM	Hardwoods RPM	Aluminum/Brass RPM	Mild Steel RPM
1/16"-3/16"	2500	2200	1250	1700
1/4"-3/8"	1900	1700	1000	1250
7/16"-3/4"	1000	1000	700	800
Spade/Forstner Bit				
3/8"-5/8"	2000	1600	x	x
11/16"-1"	1200	1000	x	x
1 1/16"-1 7/16"	800	600	x	x
2"-3"	500	450	x	x

GO 2 Online Extras

For a handy drill press speed chart, go to: Woodsmith.com/255

Now that you have the right bits for your projects, you'll want to consider a few "upgrades" to get better results at your drill press.

ADDING A TABLE

The first upgrade you should make to turn your drill press into a woodworking workhorse is adding an auxiliary table. The cast iron table that comes standard is really designed for working with metal and it's too small for the types of workpieces that are common on most woodworking projects.

The simplest solution is to slap on a large piece of plywood and go to work (which is what I did at first). But with just a little effort, creating a table that will do much more is pretty easy.

A quick and simple version that will cover your needs for a long time is the one you see in the main photo on the previous page and in the photos on these pages. Plus, you'll find detailed plans at *Woodsmith.com/255* to build the one shown.

This auxiliary table is just a piece of plywood with a layer of hardboard attached to the top. It attaches to the metal table of the drill press using T-nuts and bolts.

A basic plywood table is a must-have add-on. Besides providing better support for larger workpieces, a replaceable insert ensures you'll always have solid backing for any drill bit (photo below).

This two-layer design accomplishes a couple of things. First, it makes it easy to add a replaceable insert, (photo at right). After use, the insert will get chewed up. As that happens, all you need to do is slide the insert out to a fresh area. Or replace it altogether. (I made a few spare inserts when I built my first table.)

The dovetail design (inset) means the insert can be adjusted to provide solid support or replaced as needed.

INCREASING ACCURACY

The other advantage with this two-layer design is it allows you to build in a pair of T-tracks. This way, adding an adjustable fence to increase accuracy is no problem. A fence ensures that anything you drill will be a specific distance from the edge of the workpiece. A great example of this is drilling a set of shelf pin holes in the sides of a cabinet. Another is creating a mortise is quick and easy, too. Just drill a series of overlapping holes, knowing the workpiece won't shift as you're working.

The fence shown at the far left is secured to the table with a pair of knobs and flange bolts that fit into the T-track (near left photo). Loosen them and the fence moves easily in or out. Tighten

Adding an adjustable fence and a stop block ensures accuracy and repeatability. T-tracks built into the table allow you to securely lock the fence in place.

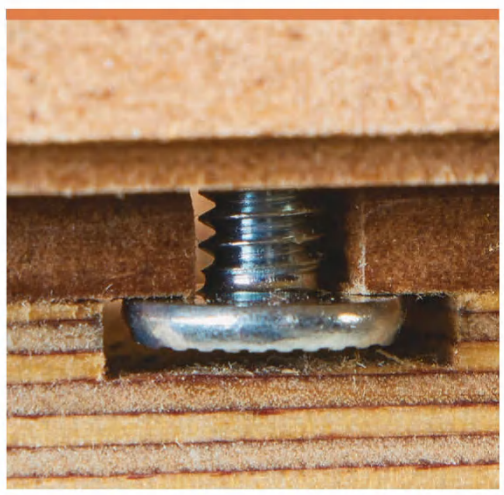

T-track in your drill press table allows for a variety of options for workholding and accessories.

the knobs and the fence locks solidly in place. A chamfer along the lower front edge ensures that dust and small chips won't prevent the workpiece from contacting the fence correctly.

STOP BLOCKS. There are times when you need to ensure accurate drilling from the ends of a workpiece. Here, I find a pair of stop blocks are handy.

You can use them individually, as shown in the lower left photo on the opposite page, or in pairs to accurately position multiple workpieces. The main photo on page 56 illustrates this.

SPACERS TO THE RESCUE. Sometimes the workpieces I'm drilling are too long to allow me to use both stop blocks to accurately locate the start and stop points for drilling. When that's the case, I set one stop block to locate the workpiece for the first hole, like you see in the upper left photo.

To reposition it for the next hole (or holes), I use a spacer block (far right photo). You can make the spacer block any size you need to shift the workpiece. Or you can use multiples if you need to drill a series of evenly spaced holes in any number of workpieces. Be sure to account for the diameter of the bit when you size the spacers.

OTHER CAPABILITIES. Finally, to get more out of your drill press, you can task it for other shop duties, like sanding. For more about that, check out the box below.

My productivity and accuracy increased tremendously after adding a drill press to my workshop. It did mean working in a few upgrades, but as you've learned here, it doesn't take a lot of effort to improve your drill press. W

Stop blocks maintain accuracy and speed up your workflow. Here, the stop block positions the workpiece for one end of a mortise.

Adding in a spacer block shifts the workpiece to establish the opposite end of the mortise.

SANDING ON THE DRILL PRESS

Another way to get more value from your drill press is to use it for a different woodworking operation altogether. In my case, I like to use the drill press for sanding. By purchasing spindle sanding drums that are designed for your drill press, turning your drill press into a go-to tool for smoothing out the edges of curved parts is a snap, as you can see at right.

These drums work great, but I do have a couple of suggestions for getting the most from them. First, it's important to fully "seat" the drum to get good results sanding. To do this, I just make a plywood table with a hole in the center slightly larger than the diameter of the sanding drum (inset photo). Then lock the drill press quill in position to begin sanding. Also, you'll want to clean the drum periodically with a crepe rubber block to keep it working its best, as shown at the far right of the main photo.

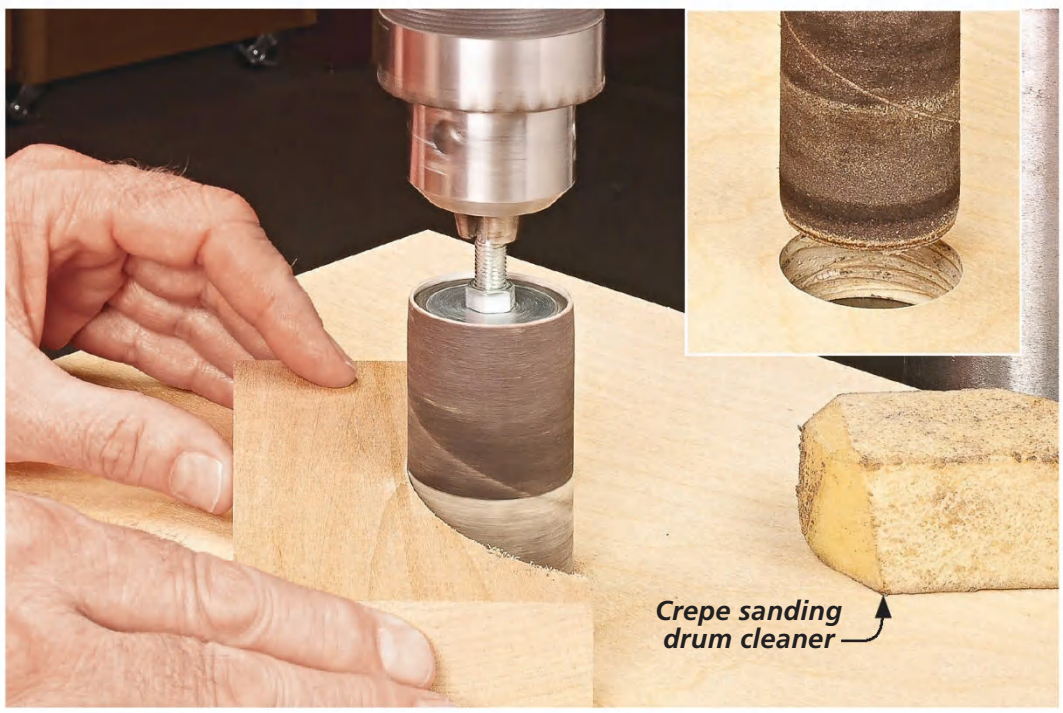

Your drill press can do a lot more than just make holes. Outfit it with a spindle sanding drum attachment and an auxiliary table (inset) to smooth the edges of curved workpieces.

Dovetails

GO 2 Online Extras

For free plans on how to make the dovetail jig, go to: Woodsmith.com/255

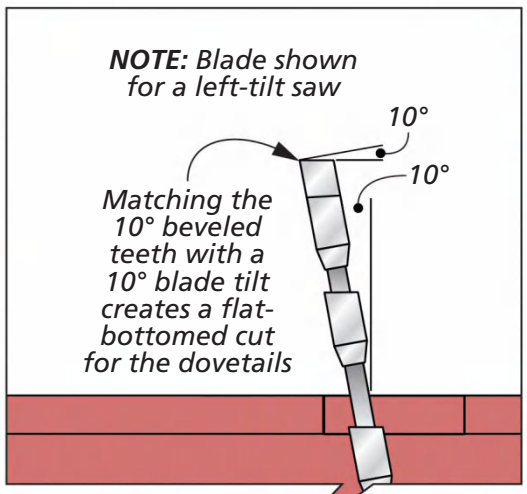

It might surprise you to learn that you can use your table saw to make perfect-fitting through dovetails, like the ones shown in the inset photo above. All you need is a simple shop-built jig and a saw blade ground to leave perfectly angled corners. Best of all, this technique results in through dovetails with that distinct, "hand-cut" look.

The jig is similar to a crosscut sled but the fence is adjustable to allow for cutting both the pins and tails. (For more on building the jig, go online to *Woodsmith.com/255*.) Besides the jig, you'll also need a special saw blade to cut dovetails on the table saw.

THE BLADE. If you use a regular blade to make the angled cuts needed for the dovetails, you'll end up doing a fair amount of hand work to clean up the inside corners. There's a better way.

Forrest Manufacturing, a company long known for high-quality woodworking saw blades has come to the rescue. If you go to their website *Forrestblades.com*, and do a search for "dovetail saw blades," you'll be directed to a page that lets you custom-build a blade. On that page, you'll have to specify the angle grind you want (our blade is 10°). The direction of tilt you want, left or right. Finally, the blade comes with a standard 5/8" bore, but you can change that as well.

As they state on the website, custom ordered blades take time to make, so plan ahead for this. But once you've got your new blade in hand, you're off to the dovetail races, starting with the tails.

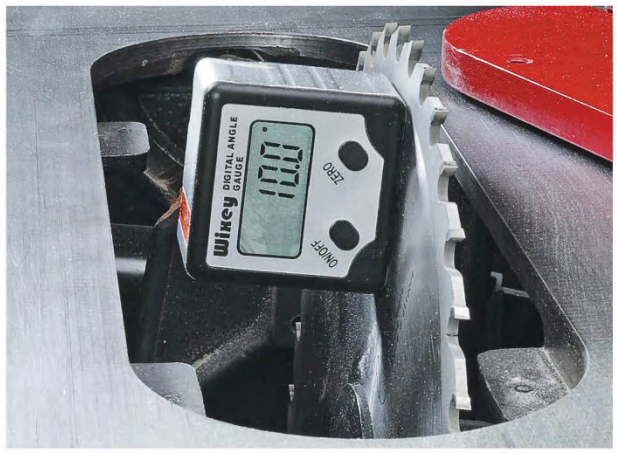

▲ A digital angle gauge lets you accurately adjust the saw blade to match the desired dovetail angle.

Written by: Bryan Nelson

TAILS FIRST

This technique starts with cutting the tails first. You can then use them to accurately lay out the pin positions. Like any method of cutting dovetails, this table saw technique depends on your stock being perfectly flat and square.

While you're milling your stock, go ahead and make a couple of test pieces as well. The test pieces will give you a chance to practice the technique and become familiar with the overall process.

LAYOUT. Once you've finished preparing your workpieces, you can start laying out the tails, as in the photo above. The nice thing is, you only need to do this on one end of one workpiece.

Keep in mind that you can vary the size of the tails, but the overall layout needs to be symmetrical about the centerline of the workpiece. Plus, the space between the tails, where the pins will go, shouldn't be any narrower than 3/16" to provide clearance for the saw blade.

With a bevel gauge set to the proper dovetail angle, mark the tail locations on a test piece. A sharp, soft-leaded pencil provides the best marks.

Finally, to avoid making any mistakes as you work, mark the waste areas with an "X."

FIRST CUTS. After tilting the blade on your saw, as shown on the previous page, you're ready to make the first cut. Start by putting the jig into position on the table saw with the fence positioned square to the blade to make the tails. Holding the workpiece against the fence, slide the jig forward to align the blade to the outside (waste side) of the first layout mark.

Next, slide the stop block against the workpiece and lock it in place. Once the stop block is set, you're ready to make the first cuts in all your tail workpieces (photo 1 at lower left). Be sure to set the blade height to match your layout line. In fact, I like to go just a hair deeper than the overall stock thickness to be on the safe side.

Photos 2 and 3 below show you how I use a simple, cut-and-flip sequence to make the four remaining cuts. You just need to make sure to hold the workpiece securely against the stop block and jig fence.

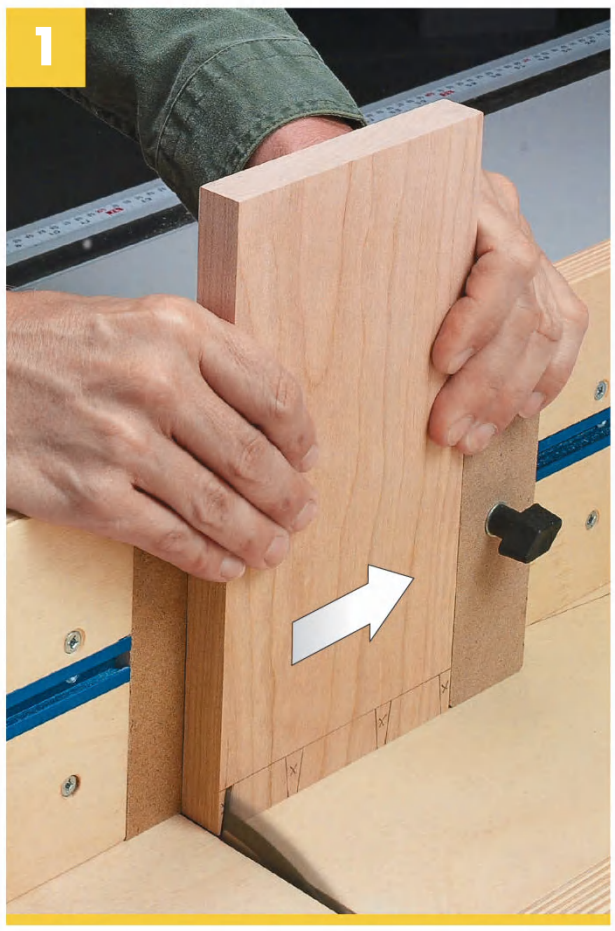

After aligning the layout mark with the blade, lock the stop block into position and make the first cut.

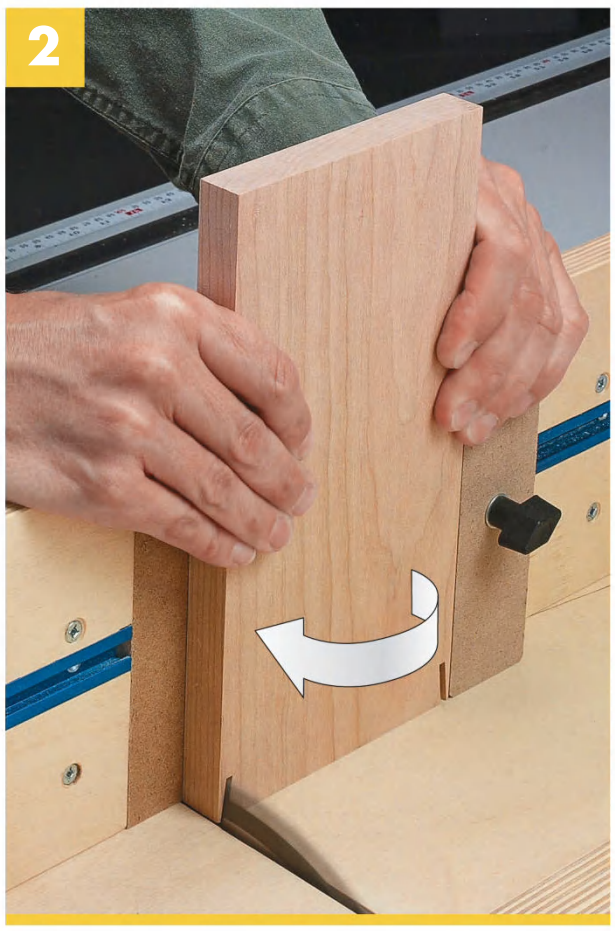

Rotate the workpiece to make the matching cut on the opposite side. This technique ensures uniform spacing.

Flipping the workpiece end-over-end allows you to make the identical cuts on the opposite end.

Illustrations: Bob Zimmerman

COMPLETING THE TAILS

Now that you've made the first set of cuts that define one edge of the outside tails, you have a good understanding of how the jig and overall technique work. You'll repeat this process to complete the rest of the tails on all your remaining workpieces.

The nice thing is you won't need to worry about working to any layout lines for the rest of the work on the tails. That's going to be taken care of by a set of spacers, like the ones you see below. They're the key to accurate tails — and tight-fitting pins, as you'll find out later.

SPACERS. The trick is sizing the spacers. For the technique to work, the spacers must be sized accurately. The photo and drawing below shows the relationship between the spacers and the layout already completed on the tail.

SIZING THE SPACERS

When it comes to sizing the spacers, the drawing below covers what you need to keep in mind. Basically, to position the workpieces correctly for each cut, you'll need the same number of spacers that you have full pins. In the example here, there are two full pins (the two center pins), so two spacers are required.

Sizing the width of each spacer is just a matter of starting at the center of the half pin at one edge and measuring to the center of the first full pin. Then you continue across the workpiece, measuring from pin center to pin center. You don't need a spacer for the last half pin on the workpiece.

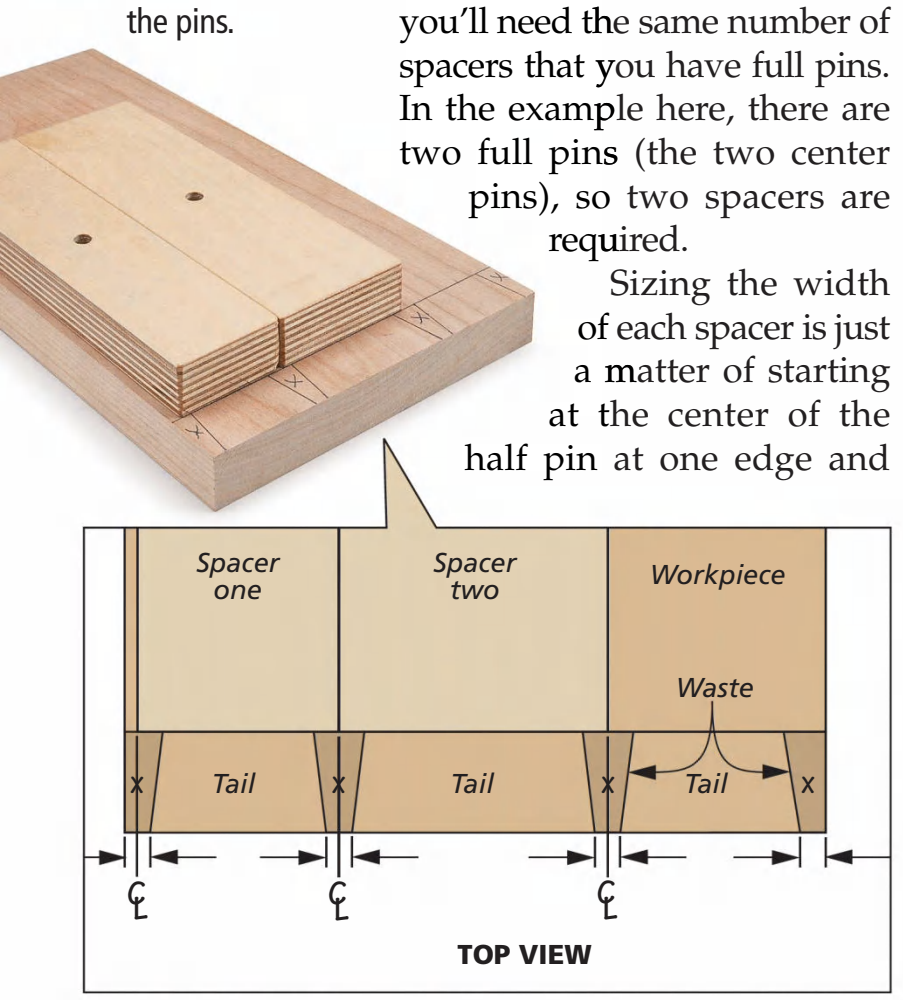

▼ Size each of the spacers to match the center-to-center spacing of the pins.

▲ At this point, the spacer accurately controls the position of the workpiece for the next cut.

▲ As you did at the start of this project, flip the workpiece over and repeat the cuts on both ends.

COMPLETING THE TAILS. At this point, completing the tail cuts starts with inserting the first spacer into the T-track, sliding it up against the stop block, and then locking the spacer in place on the fence (photo 1).

DOUBLE CHECK. To verify the correct spacer is installed, simply set the workpiece with your layout lines in place. Then just slide it up to the saw blade and double check that the blade will cut into the waste area between the tails of the workpiece.

STAY ORGANIZED. Once that's complete, you're ready to use the same process to make four cuts in all of your tail workpieces. One note of caution: It's easy to lose your concentration as you repeat the cuts four times on each workpiece, especially if you're making a big project with a lot of parts (like a set of drawers, for instance).

While the jig takes care of properly positioning the workpiece in relation to the distance from the blade, you still need to make sure you're keeping it tight against the fence and stop block/spacer setup. Keep an eye out for sawdust building up on the jig as well, since this can also throw off the position of the workpiece.

In photos 1 and 2 above, you can see the cuts being made with the first spacer in place. Adding the second spacer results in completing the shape of the tails, as you can see photos 3 and 4 at the top of the opposite page.

After wrapping up all the cuts on all of the tail workpieces, you're ready for a little bit of cleanup work to finish them.

CLEAN OUT THE WASTE. Depending on your dovetail layout, the amount of cleanup work may vary. So you have some options on how to accomplish this task.

If there's a lot of waste to clear out, simply remove the stop and spacers from the jig. Then you can simply cut away the waste with the saw blade, positioning the workpiece by eye.

The thing to make sure here is that you don't cut into any of the tails. If it's more comfortable,

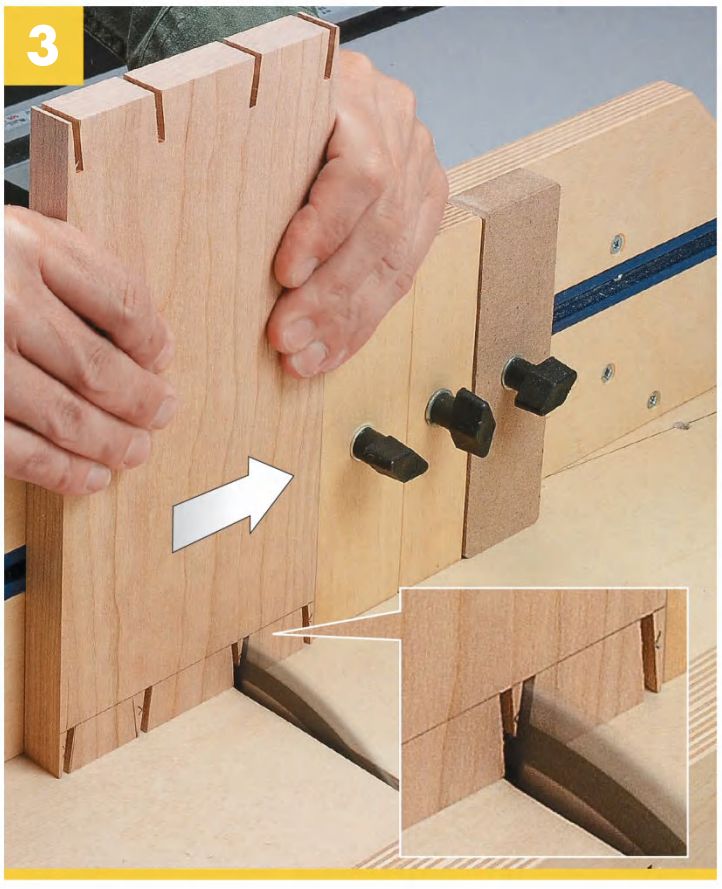

Next, it's time to slide the last spacer in place. You can see in the inset above how installing the last spacer creates the final shape of the tails.

One more step at the table saw. To complete the tails on the other end of the workpiece, flip and rotate everything one more time.

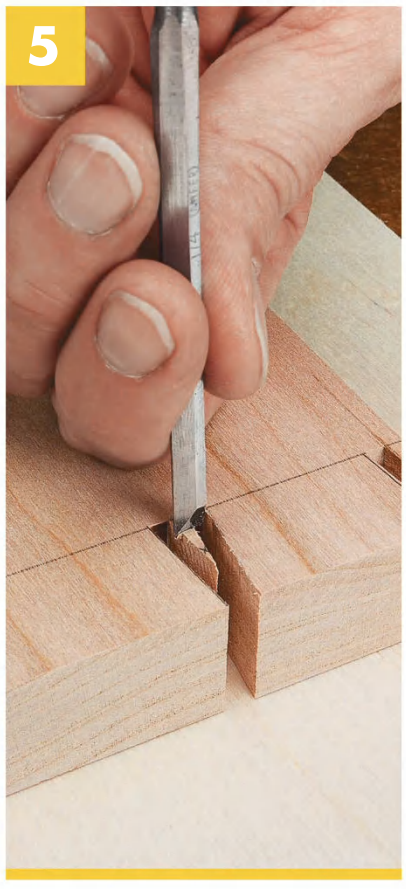

A sharp chisel makes short work of removing the waste between the tails.

you can use a fret or coping saw to remove the bulk of the waste.

For removing small amounts of waste and final cleanup, I turn to a freshly sharpened chisel, like the one you see in photo 5. A sharp chisel helps prevent tearout as you work across the grain of the workpiece.

Start by cutting down at the layout mark. Then cut in from the end to remove small pieces of waste. Be sure to flip the workpiece over to make the initial cuts on both faces rather than just cutting through from one side.

LAY OUT THE PINS. Once you've finished removing all of the waste, you're halfway to a complete dovetail joint. Now you can turn your attention to the other half of this classic woodworking joint — the pins.

Use the completed tail workpiece with the original layout to locate the pins on the mating workpiece.

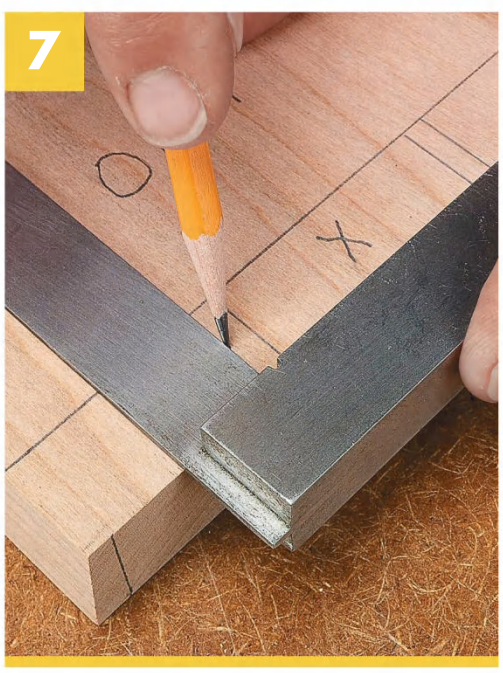

Transfer the layout marks down the front face of one workpiece. This is the piece you start with.

You can see how to lay out the pin workpiece using a completed tail piece in photo 6 at the lower left. Here again, you'll only need to lay out the pins on one workpiece. The spacers will position the rest of the pin workpieces properly after the initial cut is made for the first pin.

These layout marks will only be used to initially position the stop block. Plus, it helps during the actual cuts so you know which spots are the waste areas. I make sure to sharpen my pencil and make the marks as accurately as possible.

Now, using a square, transfer the layout marks for each pin down both faces of the workpiece (photo 7). I like to mark the edge, like you see in the margin again, to identify which pin I'm going to fit first. Finally, mark the outside faces of all the workpieces.

Now you're ready to start cutting the mating pins. For more on this, turn to the next page.

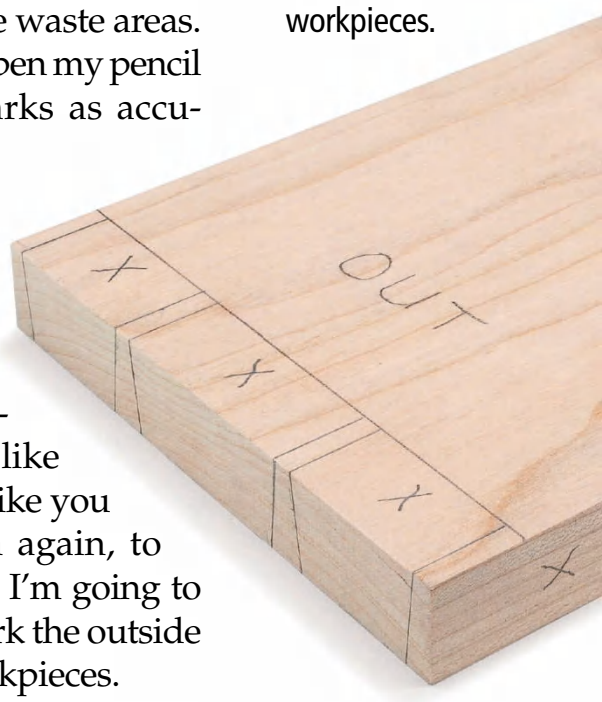

To keep the workpieces in order for the next step, mark the outside face of all the pin workpieces.

Position the stop block so the size of the first pin matches the tail workpiece. Then make a cut on both ends of all workpieces.

Sneak up on the final size of the first pin until it matches its mating opening in the tail workpiece.

Now you can flip the workpiece and make a cut for the pin at the opposite corner.

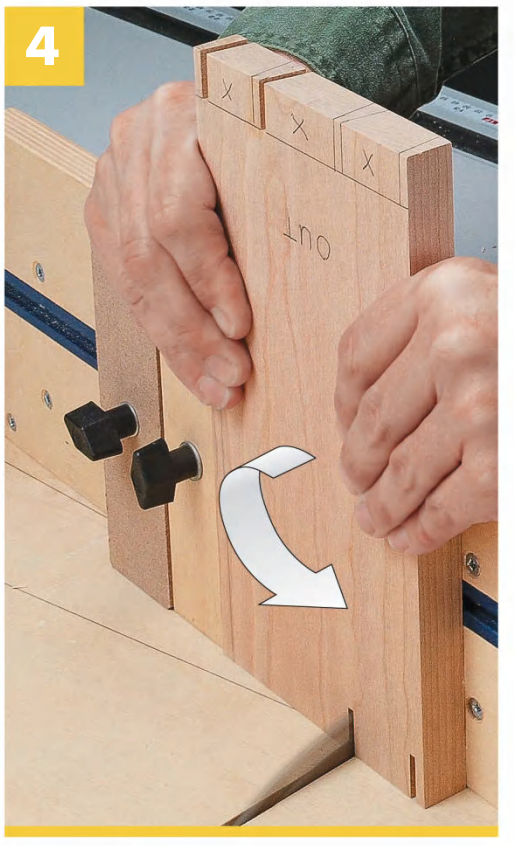

Next, add the first spacer. Just like with the tails, add a spacer and make the next set of cuts.

With the last spacer in place, cut all the workpieces to complete one angle on all the pins.

FITTING THE PINS

With the layout complete, you're just about ready to start cutting the pins. But there are a couple adjustments you'll need to make to the jig and your table saw. The first thing to do is reset your table saw blade to 90°. Unlike the tails, the pins are cut with the blade square to the table. Instead of tilting the blade, you'll set the angle of the jig to match the tail angle.

The last thing you'll need to do is remove the dovetail blade you used to cut the tails. To get a flat bottom, use a rip blade. A dado blade does remove the waste quicker, but I've found I get the best results with a rip blade.

SIZING THE FIRST PIN. You must match the first pin with the tail piece. For the edges of the workpieces to end up flush, the first pin needs to match its mating opening in the tail piece exactly.

The process for doing this is just a matter of sneaking up on the final size. After that, completing the rest of the pins involves using the spacers. Then you'll do some fine-tuning right on the table saw.

ADJUST THE FENCE. Pull the indexing pin and angle the fence on the jig back to match the dovetail angle. And be sure that the depth of cut of the saw blade matches the layout line on the pin workpiece. At this point, you're ready to create the first pin (photo 1).

CHECK THE FIT. The goal here is that the pin matches its mating tail piece. Since you can't slide the pieces together, check the fit by comparing both next to each other, as in photo 2.

It's time to make the interior pins. After adjusting the fence to angle forward, reposition the stop block to form an oversized pin on the workpiece (photo 6). Then install each spacer in turn to complete the remaining pins, as shown in photos 7 and 8.

RIKON®

70-150VSR

12"x 16-1/2" VSR Midi Lathe

NEW

5 YEAR WARRANTY

1 HP VSR Motor | Forward & Reverse | 16-1/2" Between Centers

Designed with a powerful **1 HP motor**, featuring variable speed control, & forward/reverse.

Control Box has a magnetic back so that it can be set anywhere along the lathe for quick access when turning.

1" x 8 TPI threaded spindle Ball-Bearing Construction for Smooth, Precise Spindle Operation

Machined headstock end milled to take a special 13-1/2" bed extension to allow outboard turning of diameters up to 15".

SOLD SEPARATELY

Call today for more information **877-884-5167** or visit **www.rikontools.com** for a dealer near you!

CUTTING ALL THE ENDS. Once you have a good "fit," you can lock the stop block in place and cut both ends of all the pin workpieces for this position. Note: The outside face will always be out for the entire pin-cutting process.

As you can see in photos 4 and 5 on the previous page, you'll continue the process using the spacer blocks. Again, use your layout lines to be sure you're only cutting into the waste areas.

SHAPING THE PINS. To form the final shape of the pins, you'll need to cut the opposite sides of the pins. This means angling and locking the fence forward.

You'll also need to reset the stop block for these cuts. The goal here is to cut the pins slightly oversize. This way, you can sneak up on the final fit (more on this later).

For now, simply use your layout line as a guide to set the stop block to cut oversized pins, as shown in photo 6 on page 64. Once the stop block is set, complete the cuts across the bottom of one pin piece, using the spacers as necessary, like you see on page 64 in photos 7 and 8 at the bottom of the page.

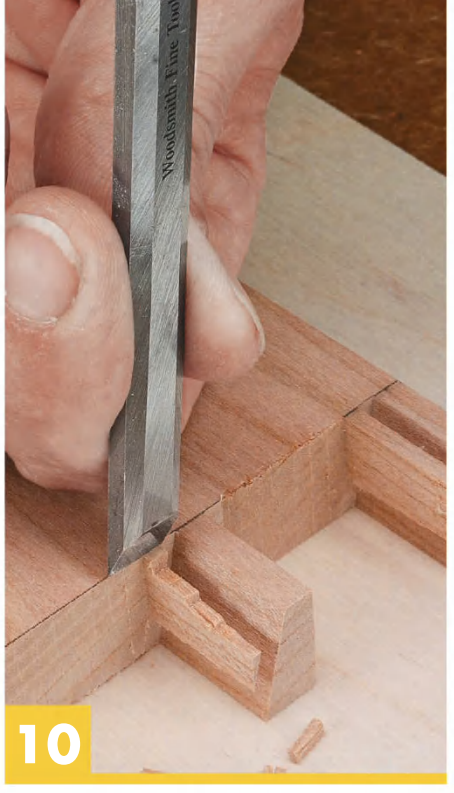

Without moving the stop block, remove as much waste as possible at the table saw, then complete the rest of the task with a chisel (photo 10).

CHECKING THE FIT. At this point, you're ready for a test fit. Since the pieces won't slide together because of the waste, you'll need to remove that. I use the table saw to remove as much as I can (photo 9). Then, clean up any remaining waste with a chisel (photo 10).

Once you've finished cleaning up the pins, it's time to test the fit of the joint. The fit should just slide together, as pictured in photo 11 below.

FINE-TUNING. Since the pins were oversized, they probably won't fit together. So you'll need to fine-tune the fit by trimming one side of all the pins. This is just a matter of making another cut with a thin paper shim between the stop block and workpiece. Now, leave the shim in place and use the spacers to trim the other pins.

Simply sneak up on the fit by adding shims until the pins just slide into the tails. With the shim thickness set, you can complete all the cuts on the remaining pin pieces. After removing the waste, every joint will slide together with an identical, smooth fit.

As you can see, a shop-built jig and step-by-step process makes cutting through dovetails pretty straightforward. And you can't beat the "hand-cut" look. W

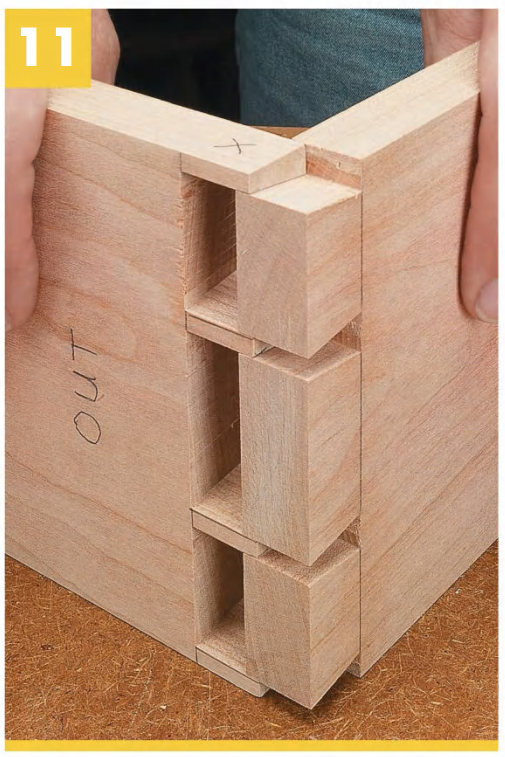

The pins should be sized so they just slide into the tails. If they're too tight, you'll need to fine tune.

Fine-tuning the pins is a simple process. Zeroing in on the fit is just a matter of slipping in a paper shim and repeating the cuts with each spacer (photo 13) to shave a small amount off each pin. An old playing card will also work well as a shim.

Do it Right with DR®

America's Original Field & Brush Mower!

- Mow grass up to 8' high
- Cut brush up to 3" thick
- Engines up to 22 HP
- Decks up to 34" wide
- Power steering

★USA ENGINEERED AND BUILT
Assembled in the USA using domestic and foreign parts.

DRfieldbrush.com

Make Yard Cleanup EASY with a Chipper Shredder!

★USA ENGINEERED AND BUILT
Assembled in the USA using domestic and foreign parts.

- CHIP big branches up to 5" thick
- SHRED lighter yard and garden waste
- REDUCE it all to a fraction of its original volume

DRchipper.com

Make Stumps Disappear!

★USA ENGINEERED AND BUILT
Assembled in the USA using domestic and foreign parts.

- Grind away stumps fast
- Tungsten carbide-tipped teeth
- Rotary head takes 360 "bites" per second
- Self-propelled available

DRstumpgrinder.com

Great Gardens Start with DR® Rototillers!

- Bust sod and churn through the most compacted ground
- Prepare seedbeds or till garden waste back into your soil
- Full line includes walk-behinds, tow-behinds, and cultivators

DRrototiller.com

SALE! Including FREE SHIPPING | EASY FINANCING
Some limitations apply. Go online or call for details.

GoDRpower.com

Request your FREE PRODUCT CATALOG Online or Toll-Free at 888-212-2421

PROFESSIONAL POWER DR DONE RIGHT

Blue Spruce
TOOLWORKS

Imagine a chisel perfectly flat and surgically sharp right out of the box…introducing our new *Optima Chisels*. Each chisel back is perfectly lapped and polished to give you unrivaled flatness. Each bevel is individually ground and honed by skilled craftsmen. The double-tempered and cryogenically treated A2 steel blades have the fine grain structure needed for surgical level sharpness and the durability to keep it. And, like all Blue Spruce Tools, they're a delight to hold, admire and use.

Visit our website to learn more about these remarkable new tools. **BlueSpruceToolworks.com**

Strongsville, Ohio • 877·828·0332

Woodsmith

Back Issue Library **Online**

An Incredible **VALUE!**

- ✓ Access every issue of Woodsmith ever published — over 228
- ✓ Get over 4,000+ projects, tips and technigues.
- ✓ Enjoy instant online access on your computer, laptop — even tablet.

LEARN MORE at www.woodsmithlibrary.com

Sign Up for Free Weekly eTips

Desktop

- Get a video tip sent to you every week
- Includes a printable, step-by-step tip
- Ready when you are — on any device

Laptop

Tablet

Smartphone

Sign up today at Woodsmith.com